Science Arts & Métiers (SAM)
is an open access repository that collects the work of Arts et Métiers Institute of Technology researchers and makes it freely available over the web where possible.

This is an author-deposited version published in: https://sam.ensam.eu
Handle ID: .http://hdl.handle.net/10985/10230

To cite this version :

Victor CALATORU, Marek BALAZINSKI, Mickaël RIVETTE - Investigation into potential use of artificial intelligence techniques in piloting additive Manufacturing Systems for Metallic materials - Buletinul Institutului Politehnic din Iasi - Vol. Tom. LX (LXIV), n°Fasc. 1, p.1-22 - 2014

Any correspondence concerning this service should be sent to the repository Administrator : scienceouverte@ensam.eu

BULETINUL INSTITUTULUI POLITEHNIC DIN IAŞI

Tomul LX (LXIV)

Fasc. 1

CONSTRUCŢII DE MAŞINI

2014 **Editura POLITEHNIUM**

BULETINUL INSTITUTULUI POLITEHNIC DIN IAŞI
PUBLISHED BY
"GHEORGHE ASACHI" TECHNICAL UNIVERSITY OF IAŞI
Editorial Office: Bd. D. Mangeron 63, 700050, Iaşi, ROMANIA
Tel. 40-232-278683; Fax: 40-232-237666; *e-mail*: polytech@mail.tuiasi.ro

Editorial Board

President: Prof. dr. eng. **Ion Giurma**, Member of the Academy of Agricultural Sciences and Forest, *Rector* of the "Gheorghe Asachi" Technical University of Iaşi

Editor-in-Chief: Prof. dr. eng. **Carmen Teodosiu**, *Vice-Rector* of the "Gheorghe Asachi" Technical University of Iaşi

Honorary Editors of the Bulletin: Prof. dr. eng. **Alfred Braier**, Prof. dr. eng. **Hugo Rosman**
Prof. dr. eng. **Mihail Voicu**, Corresponding Member of the Romanian Academy

***Editors in Chief of the* MACHINE CONSTRUCTIONS Section**
Prof. dr. eng. **Radu Ibănescu**, Assoc. prof. dr. eng. **Aristotel Popescu**
Honorary Editors: Prof. dr. eng. **Gheorghe Nagîţ**, Prof. dr. eng. **Cezar Oprişan**
Associated Editor: Assoc. prof. dr. eng. **Eugen Axinte**

Editorial Advisory Board

Prof.dr.eng. **Nicuşor Amariei**, „Gheorghe Asachi" Technical University of Iaşi
Assoc.prof.dr.eng. **Aristomenis Antoniadis**, Technical University of Crete, Greece
Prof.dr.eng. **Virgil Atanasiu**, „Gheorghe Asachi" Technical University of Iaşi
Prof.dr.eng. **Petru Berce**, Technical University of Cluj-Napoca
Prof.dr.eng. **Ion Bostan**, Technical University of Chişinău, Republic of Moldova
Prof.dr.eng. **Walter Calles**, Hochschule für Technik und Wirtschaft des Saarlandes, Saarbrücken, Germany
Prof.dr.eng. **Doru Călăraşu**, „Gheorghe Asachi" Technical University of Iaşi
Prof.dr.eng. **Francisco Chinesta**, École Centrale de Nantes, France
Assoc.prof.dr.eng. **Conçalves Coelho**, University Nova of Lisbon, Portugal
Prof.dr.eng. **Juan Pablo Contreras Samper**, University of Cadiz, Spain
Assoc.prof.dr.eng. **Mircea Cozmîncă**, „Gheorghe Asachi" Technical University of Iaşi
Prof.dr.eng. **Spiridon Creţu,** „Gheorghe Asachi" Technical University of Iaşi
Prof.dr.eng. **Gheorghe Dumitraşcu**, „Gheorghe Asachi" Technical University of Iaşi
Prof.dr.eng. **Cătălin Fetecău**, University „Dunărea de Jos" of Galaţi
Prof.dr.eng. **Mihai Gafiţanu**, „Gheorghe Asachi" Technical University of Iaşi
Prof.dr.eng. **Radu Gaiginschi**, „Gheorghe Asachi" Technical University of Iaşi
Prof.dr.eng. **Francisco Javier Santos Martin,** University of Valladolid, Spain
Prof. dr. **Dirk Lefeber**, Vrije Universiteit Brussels, Belgium
Prof.dr.eng. **Dorel Leon**, „Gheorghe Asachi" Technical University of Iaşi
Prof.dr.eng. **James A. Liburdy**, Oregon State University, Corvallis, Oregon, SUA
Prof.dr.eng.dr. h.c. **Peter Lorenz,** Hochschule für Technik und Wirtschaft, Saarbrücken, Germany
Prof.dr.eng. **Nouraş -Barbu Lupulescu**, University Transilvania of Braşov
Prof.dr.eng. **Fabio Miani,** University of Udine, Italy
Prof.dr.eng. **Mircea Mihailide**, „Gheorghe Asachi" Technical University of Iaşi
Prof.dr.eng. **Sevasti Mitsi**, Aristotle University of Thessaloniki, Salonic, Greece
Prof.dr.eng. **Vasile Neculăiasa**, „Gheorghe Asachi" Technical University of Iaşi
Prof.dr.eng. **Fernando José Neto da Silva**, University of Aveiro, Portugal
Prof.dr.eng. **Dumitru Olaru**, „Gheorghe Asachi" Technical University of Iaşi
Prof.dr.eng. **Manuel San Juan Blanco**, University of Valladolid, Spain
Prof.dr.eng. **Loredana Santo**,University „Tor Vergata", Rome, Italy
Prof.dr.eng. **Cristina Siligardi**, University of Modena, Italy
Prof.dr.eng. **Filipe Silva**, University of Minho, Portugal
Prof.dr.eng. **Laurenţiu Slătineanu**, „Gheorghe Asachi" Technical University of Iaşi
Lecturer dr.eng. **Birgit Kjærside Storm**, Aalborg Universitet Esbjerg, Denmark
Prof.dr.eng. **Ezio Spessa**, Politecnico di Torino, Italy
Prof.dr.eng.**Roberto Teti**, University „Federico II", Naples, Italy
Prof.dr.eng. **Alexei Toca**, Technical University of Chişinău, Republic of Moldova
Prof.dr.eng. **Hans-Bernhard Woyand**, Bergische University Wuppertal, Germany

Papers presented at the

7th INTERNATIONAL CONFERENCE on MANUFACTURING SYSTEMS

Iaşi, October 24th – 25th, 2013

organized by **MACHINE TOOLS DEPARTMENT,**
Faculty of MACHINE MANUFACTURING&INDUSTRIAL MANAGEMENT

Papers published with the support of
NATIONAL AUTHORITY for SCIENTIFIC RESEARCH

EDITOR

MACHINE CONSTRUCTIONS
Fascicle 1

Assoc. Prof. Irina Cozmîncă PhD

BULETINUL INSTITUTULUI POLITEHNIC DIN IAŞI
Publicat de
UNIVERSITATEA TEHNICĂ „GHEORGHE ASACHI” DIN IAŞI
Tomul LX (LXIV), Fasc. 1 2014

Secţia

CONSTRUCŢII DE MAŞINI

S U M A R

Pag.

EUGEN CARATA, MIHĂIȚĂ HORODINCĂ și LIVIU CAŞCAVAL, Comanda în buclă închisă la prelucrarea cilindrilor de laminor pe maşini de rectificat cu CNC (engl., rez. rom.)..... 1

CRISTIAN CROITORU şi MIHAI SEVERINCU, O nouă abordare a sculelor armate cu plăcuţe aşchietoare schimbabile. I. Abordare teoretică (engl., rez. rom.)..... 7

ANA-MARIA BOCĂNEȚ și MIRCEA COZMÎNCĂ, Contribuţii teoretice la dezvoltarea unor noi modele de evaluare a forţelor la frezarea frontală (engl., rez. rom.)..... 17

VICTOR CĂLĂTORU, MAREK BALAZINSKI și MICKAEL RIVETTE, Cercetări privind utilizarea posibilă a tehnicilor de inteligență artificială în controlul sistemelor de fabricație prin aport de materie pentru materiale metalice (engl., rez. rom.)..... 25

BRUNO RĂDULESCU și MARA-CRISTINA RĂDULESCU, Elemente de decizie în achiziția unei mașini de debitare termică sau cu apă (engl., rez. rom.) 39

BRUNO RĂDULESCU și MARA-CRISTINA RĂDULESCU, Condiții speciale de utilizare a plăcuțelor aşchietoare (engl., rez. rom.)..... 45

DANIELA (BOGDAN) AMARIȚEI și CĂTĂLIN GABRIEL DUMITRAȘ, Aspecte privind implementarea controlului statistic al proceselor (engl., rez. rom.)..... 51

BOGDAN-GABRIEL ANIȚĂ și CĂTĂLIN DUMITRAȘ, Studiu asupra frezării suprafețelor complexe. I. Modelarea procesului de frezare (engl., rez. rom.)..... 57

BOGDAN-GABRIEL ANIȚĂ și CĂTĂLIN DUMITRAȘ, Studiu asupra frezării suprafețelor complexe. II. Prelucrarea cu viteze mari și erorile de prelucrare (engl., rez. rom.) 65

AURORA ALEXANDRESCU și ADINA SIMONA MIRON, Îmbunătățirea calității apei prin optimizarea parametrilor din stațiile de pompare (engl., rez. rom.)..... 73

BULLETIN OF THE POLYTECHNIC INSTITUTE OF IAŞI
Published by the
„GHEORGHE ASACHI" TECHNICAL UNIVERSITY OF IAŞI
Tomul LX (LXIV), Fasc. 1 2014

Section

MACHINE CONSTRUCTION

CONTENTS

Pag.

EUGEN CARATA, MIHĂIŢĂ HORODINCĂ and LIVIU CAŞCAVAL, Closed Loop Control for Roll Profile on CNC Grinding Machine (English, Romanian Summary)..... 1

CRISTIAN CROITORU and MIHAI SEVERINCU, New Approach on Geometry Tools with Indexable Inserts. I. Theoretical Approach (English, Romanian Summary)..... 7

ANA-MARIA BOCĂNEŢ and MIRCEA COZMÎNCĂ, Theoretical Contributions to the Development of New Valuation Models of Face Milling Forces (English, Romanian Summary)..... 17

VICTOR CĂLĂTORU, MAREK BALAZINSKI and MICKAEL RIVETTE, Investigation into Potential Use of Artificial Intelligence Techniques in Piloting Additive Manufacturing Systems for Metallic Materials (English, Romanian Summary)..... 25

BRUNO RĂDULESCU and MARA-CRISTINA RĂDULESCU, Investment and Decision Elements for Thermal or Water Jet Cutting Machine (English, Romanian Summary) 39

BRUNO RĂDULESCU and MARA-CRISTINA RĂDULESCU, Specific Conditions of Using Milling Inserts (English, Romanian Summary)..... 45

DANIELA (BOGDAN) AMARIȚEI and CĂTĂLIN GABRIEL DUMITRAȘ, Some Aspects Regarding the Implementation of Statistical Process Control Plan (English, Romanian Summary)..... 51

BOGDAN-GABRIEL ANIȚĂ and CĂTĂLIN DUMITRAȘ, Study upon Milling Complex Surface. Part I: Modelling of Milling Process (English, Romanian Summary)..... 57

BOGDAN-GABRIEL ANIȚĂ and CĂTĂLIN DUMITRAȘ, Study upon Milling Complex Surface. Part II: High Speed Machining and Machining Errors (English, Romanian Summary) 65

AURORA ALEXANDRESCU and ADINA SIMONA MIRON, The Water Quality's Improvement through the Optimization of the Parameters from Pumping Station (English, Romanian Summary)..... 73

BULETINUL INSTITUTULUI POLITEHNIC DIN IAŞI
Publicat de
Universitatea Tehnică „Gheorghe Asachi” din Iaşi
Tomul LX (LXIV), Fasc. 1, 2014
Secţia
CONSTRUCŢII DE MAŞINI

INVESTIGATION INTO POTENTIAL USE OF ARTIFICIAL INTELLIGENCE TECHNIQUES IN PILOTING ADDITIVE MANUFACTURING SYSTEMS FOR METALLIC MATERIALS

BY

VICTOR CALATORU[*1], MAREK BALAZINSKI[1] and MICKAEL RIVETTE[2]

[1]École Polytechnique de Montréal, Canada,
Department of Mathematics and Industrial Engineering
[2]ENSAM Angers
Laboratoire Arts et Métiers, ParisTech, Angers

Received: September 20, 2013
Accepted for publication: October 5, 2013

Abstract. Known from the beginning of the eighties, additive manufacturing (AM) was seen as an alternative to the more traditional manufacturing technologies because of its advantages, such as absence of tools and fixtures, the possibility to produce complex, even hollow forms and a short delay between design and obtaining the part. Limited until recently mostly to low fusion point materials and to rapid building form prototypes or mock-ups, its potential use was extended to building solid parts, from high fusion point materials, such as stainless steels, refractory and Titanium alloys, due to recent developments in the field of high power, high efficiency fiber or diode lasers the density of energy available in the work area increased, allowing now higher productivity.

Keywords: additive manufacturing, direct laser deposition, cladding, materials, process control, artificial intelligence techniques, rapid prototyping.

1. Introduction

Additive manufacturing is a group of technologies, which might one day change our way of manufacturing products. The basic principle of this

[*] Corresponding author; *email*: victor-dorel.calatoru@polymtl.ca

technology is to build parts by deposing fused metal on a support, from powder, wire or other form of raw material to build from. Though laboratory uses of these technologies abound, real life applications are still reduced in number, due to lack of repeatability of the results mostly. Several application areas are already seen as feasible and efforts are put into researching this field, most notably rapid prototyping, rapid tooling, rapid manufacturing and repair and feature addition (Powers *et al.*, 2007). Depending on various aspects of the technology used and trademarks, there are many alternative names for the technologies belonging to this group.

2. Specificities of Additive Manufacturing

A strategic report issued in December 2012 by the National Intelligence Council and called "The Global Trends 2030: Alternative Worlds" predicts that by 2030 additive manufacturing and 3D Printing will advance beyond their current functions of rapid prototyping and repairs in the automotive and aerospace industries to the area of mass-produced components and high value products, to offer on a larger scale mass customization and reduction of inventories, changing the fabric of industrial societies in both advanced and developing economies all over the world and bringing unforeseen economic advantages to those who wield it well (NIC, 2012).

Unlike other technologies that reached a stability level through decades of gradual improvements, with rare major breakthroughs, the additive fabrication tree of technologies is quite new and amenable to major improvements or new evolutions. Several variants of the technology introduced commercially were more or less viable once on the market (Unocic *et al.*, 2003). There are several technologies that attained a certain degree of recognition by the industry and serve as basis for experimentation.

The evolution of additive or layered manufacturing, by deposing successive layers of material on a support, did not reach its full maturity yet. Limitations in the power available in the work area, made it impossible to build fully solid parts, with porosity limited to at most 1-2 % by volume. Several variants of the process for porous parts or needing further steps to solidify them were available long ago and still continue to be used to produce "less-than-solid" parts by sintering (Lappo *et al.*, 2003), followed optionally by infiltration with a second, lower fusion temperature metal, to fill in the empty spaces between grains (Hoffmeister *et al*., 2001). Far from being outdated, technologies allow fabrication of composite-like alloys, combining for example the mechanical properties of stainless steels with the thermal conductivity of brass in the construction of injection molds.

The taxonomy of AM group of technologies is quite complex. This is due to several factors that can differ from one variant to another. A brief classification of these processes is presented further.

• LENS (Laser Engineered Net Shaping) [Pinkerton et al., 2003] is one of the first full metal laser deposition technologies, using metal powder injection for bulk parts repair, thanks to extremely powerful lasers used, being still representative for the technology. It also allows for multiple powder feeders to be adapted, in order to obtain functional gradient materials. Derivate forms of this process include SSS (Solid State Sintering) and SLM (Selective Laser Melting), differing by the temperature of the process (Lappo *et al*., 2003).
• For porous parts, the SLS (Selective Laser Sintering) process is mostly used, since it allows for fabrication from any metal available in powder form (Hoffmeister *et al*., 2001).

Several other companies produce laser deposition machines or components, among them, Optomec (USA), which uses the LENS process to produce parts with surface roughness in the range from Ra = 12μm to 25 μm, EOS (Germany), which produces mostly powder bed systems for the SLS technology and Arcam (Sweden), featuring a powder bed system, equipped with an electron beam (Milewski, 2000). In Canada, the company Liburdi, based in Dundas, Ontario currently sells cladding machines for repairs of turbine blades. In Europe, in particular in Germany, the interest for this technology is high. Some of the most used injection heads both for cladding and for welding are manufactured by the German company Precitec Group or by Fraunhofer Institute and by the French company IRÉPA Laser. There are also several independent research groups that developed their own proprietary injection heads all over the world.

2.1. The Source of Energy

In order to fuse the particles together or to melt them completely to form a solid block, high amounts of energy are required. Several sources of energy can be used. Lately, as mentioned earlier in this paper, the use of a laser beam seems to be the privileged way, because of the multiple advantages it offers.

Actually, it is the recent advances in laser technology which increased the interest for additive manufacturing, because until recently, the cost of energy as delivered to the part, which was the main component of the cost of manufacturing, was prohibitive. If the conversion efficiency of CO_2 lasers is limited to several percent of the electrical input power and that of the Nd-YAG is even lower, the diode lasers have a conversion efficiency of up to 60 % (Coherent, 2010) and the fiber lasers are even more efficient, at 70-80 % of the electricity transformed into beam energy (Kruth, 2004). Apparition of solid state lasers, mainly laser diode and fiber lasers cut the cost of energy delivered in multiple ways. First of all, the efficiency of the laser increased dramatically. Fig. **1** shows the variation of the output power and efficiency for a typical diode laser. We can easily observe that the efficiency increases with the current,

reaching the 60% plateau for currents of about 120 amps, which is excellent for high energy applications, such as AM. A compact module can deliver typically around 100 watts, and be grouped in compact packages delivering 1 kW of beam power. Another dent into the cost is caused by the lower maintenance costs, longer lifespan and lower need for complex cooling systems. Other benefits are the possibility to quickly adjust the power output of the module, in the range from 10% to 100% of the nominal power of the module, which could prove to be the most critical parameter in optimization of the process control.

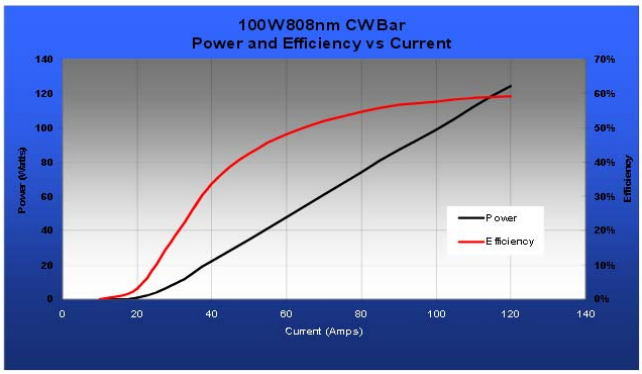

Fig. 1 – Efficiency and output power variation as function of the current absorbed from the power supply for diode lasers (Kruth, 2004).

Apart from laser, electron beams were used to manufacture parts from metal powders, the most successful implementation being the one of the Swedish company Arcam (Milewski, 2000). The use of electron beams has some advantages, such as the possibility to modulate its intensity and the possibility to focus or spread the beam as needed, but it also has a major disadvantage, the process requiring a vacuumed enclosure, which is costly and adds to the time of manufacturing. Another inconvenience is that the vacuum limits the process variants to powder beds, the projection of powders being impossible in these conditions. Ultimately, by using a vacuumed enclosure, the quality of the parts is better, since the oxidation and the nitration of the part do no longer occur and the heat dispersion is lower. Even the lasers used can make a difference in the results. Generally, the higher the power delivered, the better are the results, at least from the point of view of the productivity. However, in practice, other characteristics were found to be important, such as the frequency of the radiation emitted and the ability to control the output of power or to deliver that power in pulses with controlled frequency and duration.

2.2. The Technologies Used

Another important factor that differentiates the construction of the parts is the way the raw material is fed to the energy source. If we use powder, then

two different technologies are used currently 1) the powder bed technology and 2) the direct injection of the powder into the beam. The first technology is recently dubbed as 3D Metal Printing, as it is very similar to previous processes where form prototypes were built from starch or talcum powder after being selectively infiltrated with an adhesive with an installation similar to an inkjet printer. A schematic installation is presented in Fig. **2** (Zhoua, 2012). This process has the advantage that the layers are of equal thickness, the beam sweeping the surface of the powder bed more or less uniformly. The disadvantage is that more is needed to be available to the machine at fabrication time and not all the excess powder can be recovered. This is due to the fact that, usually, the powder bed is preheated to a temperature close to fusion point, and the laser or electron beam brings in only the quantity of energy required for fusion. The parts are thus more uniform, as they cool down embedded in a large enough volume of powder and thus the heat evacuates gradually.

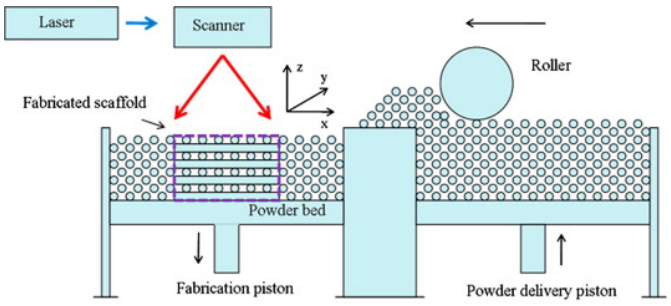

Fig. 3 – Powder bed technology used in selective laser sintering (Zhoua, 2012)

The second option is the direct deposition, when the metal powder is injected directly into the work area, where the laser beam melts the surface of the part, creating a melt pool. The smaller quantity of powder required, though there's a certain loss associated with this process too, is lesser and, because of rapid and non-uniform variation of temperature, the metallographic structures

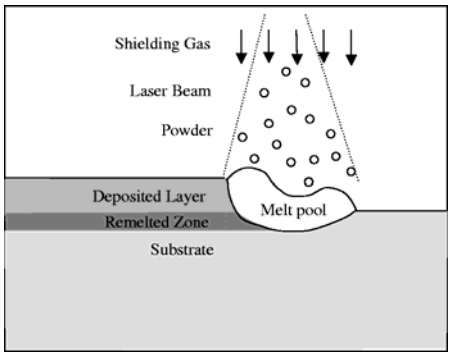

Fig. 2 – Direct Laser Deposition by injection of metal powder into the melt pool (Liou, 2007)

produced trend to be anisotropic, as resulting from hardening or tempering, depending on the alloy (Liou. 2007). By using correctly the anisotropy of the clad, increased mechanical properties could be obtained. However, the manufacturing process needs a complex strategy, associated to a CNC system.

2.3. Advantages and Drawbacks of Additive Manufacturing

AM is a versatile process, allowing to build complex parts, with internal cavities, by a process that does not require complex preparations. By choosing an appropriate strategy for building the part, the inherent anisotropy of the direct deposition process can be used to obtain parts with increased resistance in the main stress application direction. Limitations in the resolution of the built parts are caused by the size of the metallic alloy grains used and by the imperfection of the laser beam, in terms of uniformity of distribution of energy across the section of the spot projected on the part. These factors allow that incompletely melt metallic grains, partially welded to the part, stick out of the part's contour, requiring supplementary finishing of the part, usually by machining. Another issue with this technology is represented by residual stress due to high temperatures, which can be a cause of deformation of the built part.

2.4. Mechanical Properties of the Built Parts

Table 1 presents a comparison of mechanical properties of several alloys used commonly in aerospace industry, deposited by a LENS machine and the same material as obtained from annealed solid blocks. We can easily notice that for all the three materials mechanical characteristics are considerably better. However, these characteristics are difficultly reproduced during commercial application of the process or even in laboratory tests, a major block to increased use of additive manufacturing technologies in industry (Coherent, 2010).

Table 1 – *Characteristics of several materials used in aerospace industry, in common wrought or annealed form and as deposited by LENS process*

Material	Ultimate Tensile Strength (MPa)	Yield Strength (MPa)	Elongation in 50 mm (%)
LENS 316 Stainless Steel	799	500	50
316 SS Annealed bar	591	243	50
LENS Inconel® 625	938	584	38
Inconel 625 Wrought, at 870°C	285	275	125
Inconel 625 Wrought, at 20°C	827	414	40
IN 625 Annealed bar	841	403	30
LENS Ti-6Al-4V	1077	973	11
Ti-6Al-4V Annealed Bar	973	834	10

The main limitation to the application of additive manufacturing technologies is the lack of control the results of the process. Building simple test samples is easy, but building complex parts produces unpredictable results.

2.5. Laser Wavelength

The radiation spectrum of the lasers extends from the far infrared, with wavelengths of around one μm for the Nd-YAG, to around 10 μm and further into the visible spectrum or even in the UV domain for specific applications.

The choice of the right type of laser is made in conjunction with the absorption properties of the material to be used. The wavelength being fixed, the only way to adjust the input of energy into the process is to control the power of the laser beam, which is not possible for all the types of lasers.

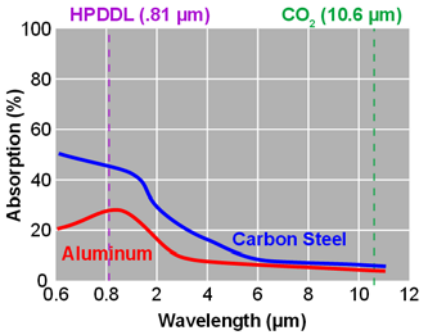

Fig. 4 – Absorption ratio as function of wavelength of the laser beam (High Power Laser Diode and CO_2).

While using a powder injection system, the powder particles would cross the laser beam, producing supplementary reflection of the beam and changing the temperature at the level of the melt pool. Fig. **4** (Coherent, 2010) presents the absorption ratio for two common materials – carbon steel and aluminum – as function of the wavelength of the laser beam used.

3. Challenges of Additive Manufacturing

As noted before, additive manufacturing is still growing to its technological maturity. Even if at the level of the metallurgical process a good repeatability and stability could be reached, there are more challenges in the control of the process aspect to be solved. Most of the researches still focus on building and characterizing simple form samples, but since the main advantages of the technology reside in the creation of complex forms, with little excess material deposited, the machines' control system needs also to be addressed.

3.1. Complexity of the Part

Both when using a powder bed system or a powder injection system, when building a complex part it is expected that process conditions vary largely due to the shape of the part. The principal elements that can vary are the thickness of the substrate, the width of the path, the existence of voids in the

form and the proximity of an edge. The main factor that could influence the heat input is the variable speed of the laser beam sweeping the surface of the part. This variation is unavoidable, since all driving systems that could be used, such as CNC machines or robots would need a certain distance to accelerate and decelerate the mechanical assembly. In fact, the complexity of parts to be manufactured is an unavoidable aspect of this technology, since its main advantage is producing complex shapes.

3.2. Changes in the Speed of Laser Beam Swiping On the Surface

Keeping the temperature constant in the melt metal pool area is necessary in order to produce consistent results. The most important factor to achieve this goal is to maintain the heat influx, produced by the laser beam, as constant as possible, supposing that other factors are constant too. Several factors can alter the energy influx in the pool area, and among the most important ones is the speed at which the laser spot swipes the part surface. This aspect is very important when the density of energy of the laser cannot be varied, as too little energy would cause the clad to remain porous or decrease the thickness of the clad, because of incomplete melting of the metal powder, and a density of energy too high would cause the part to collapse locally or even evaporation of components with lower fusion points. If metallographic structures in the metal powders are to be kept, overheating them will destroy those structures first. If the nozzle of the deposition system does not allow an adjustment in the flow of powders, metal powder will be propelled in excess in the work area, causing local deformations.

The main cause of these variations of speed is the inherent limitations of the control mechanism of the machine or the robot used, as inertia limits the maximal accelerations and decelerations of the injection head. In order to compensate the variations in the density of energy of the laser spot on the surface, the use of diode lasers and fiber lasers that allow an adjustment in the intensity of the beam is recommended. For more conventional high power lasers, such as the CO_2 or the Nd-YAG lasers, where the beam intensity cannot be adjusted, the use of optical systems that allow defocusing the beam could be a solution. However, by defocusing the beam, the resolution of the manufacturing system is affected and in both cases the debit of powder has also to be adjusted, to limit the unwanted ‘cold’ deposition of powders and waste.

3.3. Interaction between the Beam and Environment

Apart from density of energy variation caused by speed variation, there are other factors that affect the uniformity of the clad, by diminishing the available fraction of the laser power that hits the surface of the part.

Given that most of the buses have the channel for the beam coaxial and the nozzles are disposed around that channel, with projected powders

intersecting the beam, at very short distance from the surface of the part, splatter of molten metal would stick to the laser beam guide and nozzles, blocking the beam and/or the powders to reach the melted metal pool, as seen in Fig. 5. Modern designs of the injection heads extend the normal operation duration by cooling the front of the head and by using copper shields to prevent welding of hot metal particles to the exit of the beam channel and nozzles.

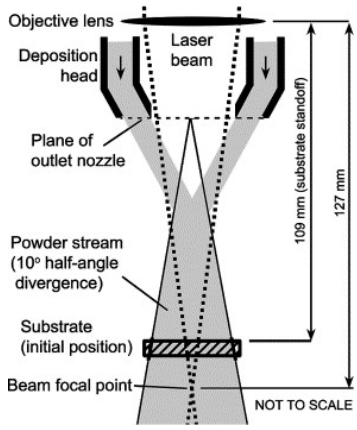

Fig. 5 – Schematic diagram of the laser beam path and coaxial powder flow below a laser deposition head (MERLIN, 2012).

Other factors that could change the intensity of the beam's useful fraction are absorption of radiation by metal powders that do not reach the deposition surface after being heated, the quantity of radiation reflected by the grains or the part's surface and the absorption of radiation by smoke, vapors or dirt accumulated on protective filters at the exit of the channel. The need to verify often the status of injection head is, in a certain extent, addressed by the use of infrared cameras that monitor the state of the nozzles and beam channel.

3.4. Changes in the Orientation of the Metal Powder Jet or Change in the Distance between the Nozzle and the Deposition Surface

When a powder injection system is used to build complex parts or to add features to existing ones, potential problems may arise because the relative position of the deposition head change continuously.

For smaller parts it is easier and to bring the part to a fixed position laser injection system, but for larger or heavier parts, the deposition head should change position around the part. Gravitation and/or variable inclination of the injection head affect the distribution of powder particles over the melt pool area.

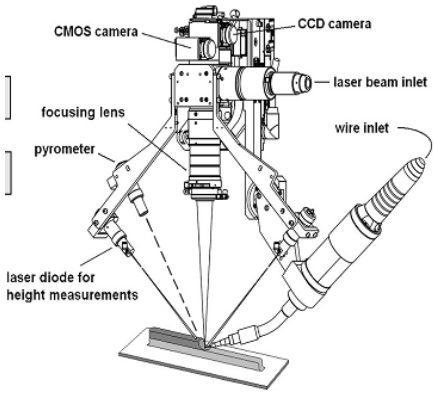

Fig. 6 – Laser metal deposition from wire.

Another aspect to consider is that the part inclination where the melt pool forms should be limited, to prevent the melt metal to drip. This requires a different control strategy than for the classical CNC machining. Other in-process sources of variability, needing constant monitoring and adjusting are the changes in the flow of gas and particles, due to jamming of the nozzles. The powder flow is difficult to regulate, as both gas pressure and gravity concur to that, and control systems cannot fit easily close enough to the nozzles to be efficient. Regulation loops based on optical recognition of particle flow could be a possible solution.

3.5 Potential Interactions at the Border between the Support and Part Built

By building a part or a feature of a part from powder we should consider potential issues that may arise from this construction. First of all, we should distinguish between the previous cases presented above, especially when the support on which the part will be built is made of a different material than the deposited one. In this case, thermal dilatation is certain to occur at the deposition of the first layers of the part to be built. Depending on the proprieties of the support material, the support could warp, distorting thus the part to be built. Another aspect is the cooling down of the support and the first layers, once enough matter has been clad upon. Contraction of the support to its original dimension would be limited by the deposited material, creating important stress in the part built. Depending on the high temperature properties of the part's material and on the adherence of the part material to the support, one o the following issues might occur: 1) the part will detach from the support before the completion of the task, 2) developing stress at the interface between the support and the part will distort either the part or the support, causing misalignment between the piloting system and the injection head, leading to a distorted part either during cladding or at separation from the support, 3) microscopic cracks would develop in the finished part compromising its

integrity. Same situation might occur when alternate layers of different materials are deposited, to create parts with special properties or even at the grain border in the functional gradient materials.

Strategies to avoid the above mentioned problems include a good match between the material of the part to be built and the support, design of supports that are either very robust or that could compensate the variation in form or size caused by intense heating. Preheating the support prior to deposition reducing the stress, since both the part and its support will heat and cool in tandem. (Fessler *et al.*, 1996) propose a technique of building a solid part from small towers of clad, joined only at the base and allow free relative displacement at the top. The large surface area to volume ratio allows the clad to relax while it cools. Then the patches created in this step will be stitched together in order to form larger features, while they are strong enough to withstand the stress induced by the smaller bridges built between. This technique can reduce the deformation of the part by a factor of three, as compared with the standard method.

3.6. Variability in the Powder Structure and Condition

Metal powders for additive manufacturing of for powder metallurgy are produced through several different processes. The characteristics of the particles vary largely. The main factors influencing the quality of the clad are: the form and the size of the particles, the type of surface the particles present, presence of oxides, of other impurities and humidity. We will discuss briefly the influence of the above mentioned parameters on the results.

The shape of particles is very important, since it will affect, among other aspects, the uniformity of the flow of powder, the way the particles stick to the surface of the melt metal pool, with a direct influence on the porosity of the part manufactured and the amount of original structure that would remain, after the particles are aggregated. Depending on the specific quantity of heat in the work area, the particles could be reduced to liquid phase only, or they might keep a nucleus which keeps the metallographic characteristics of the powder. This situation is beneficial in many cases, not only because of the energy economy, but because the powder generally has a finer grain structure, which could be transferred to the manufactured part. In the case where the original metallographic structure of the particles should be kept, another aspect that needs to be controlled is the presence of cavities in the metal particles, as these voids will be preserved in the part, increasing the porosity of the material.

During researches on metal powders, high variability of the results has been observed due to humidity in the powder. Given the dimension of the powders, raging between few μm and tens μm of in diameter, the presence of water vapors could be significant, affecting the quality of the clad by oxidation and by formation of voids.

Another issue affecting the results is the optical properties of the particles, as this will influence the way the laser beam passes the energy to the substrate. The injection of the powders is made directly into or close to the laser beam, so a part of the energy is reflected by the grains that will cross the beam.

4. Matching AI Techniques with AM Challenges

Due to the complexity of the phenomena taking place in the melt pool area and to subtle interdependence between different factors, it is very difficult to build an equation or a set of equations modeling all the technical parameters of laser deposition equipment. Many of those influences are non-linear and the variables are not independent. For example, while the NC axis of the machine is decelerating for a change or reversal of direction, increasing the density of energy of the laser, as it sweeps slower over the surface. When this change occurs once an edge of the part is reached, the heat absorption into the part decreases, as there's less metal to which this energy is passed. Considering the fact that the flows of the propelling and protective gases are disturbed due to the change in geometry, and that a larger fraction of the metal powder is lost as its flow is deflected by the edge, we may realize that no equation can take into account all these changes simultaneously. However, there are several aspects that can be handled by various AI techniques, which will be presented further.

Traditional rule based expert systems can store significant amount of rules that could be applied to the control of the motions of the machine. Thus, sets of rules can be built from the geometry of the part to be built to determine the best approach to minimize the deformations of the structure, to increase productivity or to improve mechanical properties through directed anisotropy.

In a context where influences of certain factors are not completely known or even understood, the use of fuzzy systems can allow the superposition of non-linear influences from independent factors to determine expected results.

Both of these approaches appeal more to the operating and controlling the system than to the full understanding of the underlying principles, fuzzy systems allowing a kind of interpolation of the factors in order to enable generation of a solution where no rule is clearly applicable. This technique has the advantage that it can be embarked in small dedicated controllers directly on the machine, allowing to decentralize and simplify the main control system. An example would be the rapid adjustment of metal powder flow to keep pace with the speed of the injection head in a way that would keep the deposition rate constant, all over the surface of the part or embedded controllers that would adjust the intensity of the laser beam. These systems can be programmed and work independent of the main control algorithm of the workstation.

Because neural networks need a training phase before they can fully deliver the accumulated wealth of information, it is more practical to use them in conjunction with automated data sources, such as cameras and laser scanners.

One advantage of this approach is the adaptive learning ability and self-organization, allowing the user of direct laser deposition equipment to set the goals and leave it to the machine to adjust the work parameters in order to attain the prescribed values. However, this approach can only apply to real-time measurable aspects, such as net deposition rate, based on volume changes between layers or temperature profile of the melt pool, which can be an indication of the resulting metallographic structure, but with no possible direct confirmation during manufacturing and assuming that a good balance between speed and quality is provided by neural network's design. Last but not least, the high level of redundancy of the data can produce good results, even if data are partially discarded or corrupted by irregularities in the data acquisition system.

5. Conclusions

The development of the additive manufacturing technologies group reached a point where mechanical properties for solid, full density parts make the application interesting from industrial point of view. Each week several articles are published on evaluation of mechanical properties for different alloys, common and exotic. Several companies are currently producing and selling machines and powders for AM. However, there is no sign of large scale application of this technology. The reason for this situation is that, while building standard samples for testing does not pose a problem, the phenomena taking place during the deposition of successive layers of metal, rapid changes in the local conditions at the metal pool and the variability factors in the deposition area cannot assure perfectly repeatable mechanical characteristics for all the parts, let alone the possibility to standardize the process parameters, as it is already done for traditional manufacturing.

In order to eliminate the costly trial and error in manufacturing solid metal parts with the help of AM technologies, the present paper traces some of the sources of variability of the process and proposes adequate tools for several aspects which are still difficult to control.

REFERENCES

Powers M.T., Lavernia E.J., Groza J.R., Shackelford J.F., Editors, Chapter 26 - *Layer-Based Additive Manufacturing Technologies*, in Materials Processing Handbook, pp. 26.1–26.32, CRC Press, 2007.

NIC, *The Global Trends 2030*: Alternative Worlds, Ntl. Intelligence Council, 2012.

Coherent inc., *Coherent – Heat Treating with High Power Diode Lasers*, 2010.

Kruth J.P., Mercellis Ir.P. *et al.*, *Binding Mechanisms in Selective Laser Sintering and Selective Laser Melting*, Proceedings of Solid Freeform Fabrication Conference, 44-59, San Antonio, Texas, 2004.

Lappo K., Jackson B., Wood K., Bourell D., Beaman J.J., *Discrete Multiple Material selective Laser Sintering: Nozzle Design for Powder Delivery,* Proceedings of Solid Freeform Fabrication Symposium, Univ. of Texas, Austin, Texas, , 2003.

Hofmeister W., Griffith M. *et al.*, *Solidification in Direct Metal Deposition by LENS Processing,* Journal of the Minerals, Metals and Materials Society, **53** (*9*), 30-34, Springer, (2001).

Pinkerton A.J., Li L., *The Significance of Deposition Point Standoff Variations in Multiple-Layer Coaxial Laser Cladding*, International Journal of Machine Tools and Manufacture, **44**, *6*, 573–584 (2004).

Fessler J.R., Merz R., Nickel A.H., Prinz F.B., Weiss, L.E., *Laser Deposition of Metals for Shape Deposition Manufacturing*, Proceedings of Solid Freeform Fabrication Symposium , Univ. of Texas, Austin, 1996.

MERLIN- EU Project MERLIN Outline, http://www.merlin-project.eu/project/index.jsp

Paul B.K., Baskaran S., *Issues in fabricating Manufacturing Tooling Using Powder-Based Additive Freeform Fabrication*, Journal of Materials Processing Technology, **61**, 168-172 (1996).

Unocic R., DuPont J.N., *Composition Control in the Direct Laser Deposition Process*, Metallurgical And Materials Transactions B, **34b**, 439-445 (2003).

Milewski J.O., Lewis G.K., Fonseca J., Nemec R.B., *Laser Powder Deposition of a Near Net Shape Injection Mold Core - A Case Study*, Materials and Manufacturing Processes, **15**,.*2*, 247-258 (2000).

Zhoua H, Lawrence J.G., Bhaduri S.B., *Fabrication Aspects of PLA-CaP/ PLGA-CaP Composites for Orthopedic Applications: A Review*, Acta Biomaterialia, **8**, *6*, 1999–2016 (2012).

Liou F., Slattery K., Kinsella M., Newkirk J., Chou H-N, Landers R., *Applications of a Hybrid Manufacturing Process for Fabrication of Metallic Structures.* Rapid Prototyping Journal, **13**, *4*, 236 - 244 (2007).

CERCETĂRI PRIVIND UTILIZAREA POSIBILĂ A TEHNICILOR DE INTELIGENȚĂ ARTIFICIALĂ ÎN CONTROLUL SISTEMELOR DE FABRICAȚIE PRIN APORT DE MATERIE PENTRU MATERIALE METALICE

(Rezumat)

Lucrarea prezintă câteva aspecte referitoare la fabricarea diferitelor piese prin depunere directă de metal cu ajutorul laserului. Această tehnologie este de mare interes pentru fabricarea componentelor mecanice complexe, dar controlul dificil al procesului de fabricație limitează aplicabilitatea la realizarea de piese relativ simple și efectuarea de reparații, datorită slabei repetabilități a rezultatelor, printre altele. Sunt enunțate principalele surse care contribuie la dispersia rezultatelor și sunt identificate tehnici din domeniul inteligenței artificiale care pot contribui la fiabilizarea acestora.