Science Arts & Métiers (SAM)
is an open access repository that collects the work of Arts et Métiers Institute of Technology researchers and makes it freely available over the web where possible.

This is an author-deposited version published in: https://sam.ensam.eu
Handle ID: .http://hdl.handle.net/10985/23359

To cite this version :

Mattias SCHEFFLER, Nicolas BARABINO, Marc RÉBILLAT, Nazih MECHBAL, Eric MONTEIRO - Systems and methods for controlling and implantable blood pump. 2022-03-03. Brevet n° 20220062618

Any correspondence concerning this service should be sent to the repository Administrator : scienceouverte@ensam.eu

US010799625B2

(12) **United States Patent**
Scheffler et al.

(10) **Patent No.: US 10,799,625 B2**
(45) **Date of Patent: Oct. 13, 2020**

(54) **SYSTEMS AND METHODS FOR CONTROLLING AN IMPLANTABLE BLOOD PUMP**

(71) Applicant: **CorWave SA**, Clichy (FR)

(72) Inventors: **Mattias Scheffler**, Paris (FR); **Nicolas Barabino**, Marseilles (FR); **Marc Rebillat**, Fontenay-aux-Roses (FR); **Eric Monteiro**, Lieusaint (FR); **Nazih Mechbal**, Paris (FR)

(73) Assignee: **CorWave SA**, Clichy (FR)

(*) Notice: Subject to any disclaimer, the term of this patent is extended or adjusted under 35 U.S.C. 154(b) by 0 days.

(21) Appl. No.: **16/819,021**

(22) Filed: **Mar. 13, 2020**

(65) **Prior Publication Data**

US 2020/0289731 A1 Sep. 17, 2020

Related U.S. Application Data

(60) Provisional application No. 62/819,436, filed on Mar. 15, 2019.

(51) **Int. Cl.**
A61M 1/10 (2006.01)
A61M 1/12 (2006.01)

(52) **U.S. Cl.**
CPC ***A61M 1/1086*** (2013.01); ***A61M 1/122*** (2014.02); *A61M 2205/3317* (2013.01);
(Continued)

(58) **Field of Classification Search**
CPC A61M 1/1086; A61M 1/122; A61M 2205/3317; A61M 2205/3334;
(Continued)

(56) **References Cited**

U.S. PATENT DOCUMENTS

2,842,067 A 7/1958 Stevens
3,107,630 A 10/1963 Johnson et al.
(Continued)

FOREIGN PATENT DOCUMENTS

AU 2013203301 B2 10/2015
EP 0 412 856 A1 2/1991
(Continued)

OTHER PUBLICATIONS

Ando et al., Electrocardiogram-Synchronized Rotational Speed Change Mode in Rotary Pumps Could Improve Pulsatility, Artificial Organs , 35(10):941-947 (2011).
(Continued)

Primary Examiner — Amanda K Hulbert
(74) *Attorney, Agent, or Firm* — Eversheds Sutherland (US) LLP; Christopher C. Bolten; Albert K. Heng

(57) **ABSTRACT**

Systems and methods for controlling an implantable pump are provided. For example, the exemplary controller for controlling the implantable pump may only rely on the actuator's current measurement. The controller is robust to pressure and flow changes inside the pump head, and allows fast change of pump's operation point. For example, the controller includes, a two stage, nonlinear position observer module based on a reduced order model of the electromagnetic actuator. The controller includes an algorithm that estimates the position of the moving component of the implantable pump based on the actuator's current measurement and adjusts operation of the pump accordingly. Alternatively, the controller may rely on position measurements and/or velocity estimations.

27 Claims, 35 Drawing Sheets

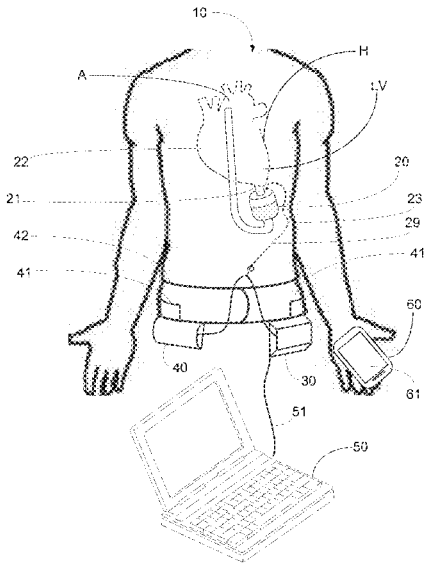

(52) **U.S. Cl.**
CPC *A61M 2205/3334* (2013.01); *A61M 2205/3523* (2013.01); *A61M 2205/50* (2013.01); *A61M 2205/8206* (2013.01); *A61M 2230/04* (2013.01)

(58) **Field of Classification Search**
CPC A61M 2205/3523; A61M 2205/50; A61M 2205/8206; A61M 2230/04
See application file for complete search history.

(56) **References Cited**

U.S. PATENT DOCUMENTS

3,165,061 A 1/1965 Smith et al.
3,608,088 A 9/1971 Dorman et al.
3,620,651 A 11/1971 Peter
3,743,446 A 7/1973 Mandroian
3,765,175 A 10/1973 Ohnaka
4,063,826 A 12/1977 Riepe
4,277,706 A 7/1981 Isaacson
4,384,830 A 5/1983 Wakelin
4,484,095 A 11/1984 Neumann
4,488,854 A 12/1984 Miller
4,498,851 A 2/1985 Kolm et al.
4,648,807 A 3/1987 Tippetts et al.
4,753,221 A 6/1988 Kensey et al.
4,906,229 A 3/1990 Wampler
4,931,036 A 6/1990 Kanai et al.
4,939,405 A 7/1990 Okuyama et al.
4,995,857 A 2/1991 Arnold
5,147,388 A 9/1992 Yamazaki
5,275,580 A 1/1994 Yamazaki
5,360,445 A 11/1994 Goldowsky
5,370,509 A 12/1994 Golding et al.
5,525,041 A 6/1996 Deak
5,588,812 A 12/1996 Taylor et al.
5,982,801 A 11/1999 Deak
6,058,593 A 5/2000 Siess
6,079,214 A 6/2000 Bishop
6,083,260 A 7/2000 Aboul-Hosn
6,116,862 A 9/2000 Rau et al.
6,123,725 A 9/2000 Aboul-Hosn
6,176,822 B1 1/2001 Nix et al.
6,176,848 B1 1/2001 Rau et al.
6,346,071 B1 2/2002 Mussivand
6,361,284 B2 3/2002 Drevet
6,395,026 B1 5/2002 Aboul-Hosn et al.
6,530,876 B1 3/2003 Spence
6,532,964 B2 3/2003 Aboul-Hosn et al.
6,658,740 B2 12/2003 Habben
6,659,740 B2 12/2003 Drevet
6,672,847 B2 1/2004 Dooley
6,723,039 B2 4/2004 French et al.
6,726,648 B2 4/2004 Kaplon et al.
6,732,501 B2 5/2004 Yu et al.
6,811,381 B2 11/2004 Dooley
6,848,001 B1 1/2005 Sakamoto et al.
6,935,344 B1 8/2005 Aboul-Hosn et al.
6,976,996 B1 12/2005 Aboul-Hosn
7,011,620 B1 3/2006 Siess
7,027,875 B2 4/2006 Siess et al.
7,182,727 B2 2/2007 Aboul-Hosn
7,323,961 B2 1/2008 Drevet
7,520,850 B2 4/2009 Brockway
7,696,634 B2 4/2010 Filardo
7,736,296 B2 6/2010 Siess et al.
7,839,007 B2 11/2010 Filardo
7,863,768 B2 1/2011 Filardo
7,889,877 B2 2/2011 Lutz
8,012,079 B2 9/2011 Delgado, III
8,157,720 B2 4/2012 Marseille et al.
8,333,686 B2 12/2012 Marseille et al.
8,343,029 B2 1/2013 Farnan et al.
8,394,009 B2 3/2013 Bolyard et al.
8,394,010 B2 3/2013 Farnan
8,432,057 B2 4/2013 Filardo
8,465,410 B2 6/2013 Marseille et al.
8,512,012 B2 8/2013 Akdis et al.
8,550,975 B2 10/2013 Foster
8,556,795 B2 10/2013 Bolyard et al.
8,585,571 B2 11/2013 Bachman et al.
8,597,350 B2 12/2013 Rudser et al.
8,610,304 B2 12/2013 Filardo
8,714,944 B2 5/2014 Drevet
8,753,256 B2 6/2014 Bolyard et al.
8,784,291 B2 7/2014 Farnan et al.
8,821,366 B2 9/2014 Farnan et al.
8,821,527 B2 9/2014 Farnan et al.
8,827,888 B2 9/2014 Bolyard et al.
8,834,136 B2 9/2014 Drevet
8,852,072 B2 10/2014 Larose et al.
8,870,739 B2 10/2014 Larose et al.
8,956,275 B2 2/2015 Bolyard et al.
9,022,916 B2 5/2015 Farnan et al.
9,080,564 B2 7/2015 Drevet
9,145,875 B2 9/2015 Filardo
9,173,984 B2 11/2015 Larose et al.
9,211,367 B2 12/2015 Farnan et al.
9,308,304 B2 4/2016 Peters et al.
9,446,180 B2 9/2016 Vadala et al.
9,526,819 B2 12/2016 Chen
9,572,915 B2 2/2017 Heuring et al.
9,579,437 B2 2/2017 Larose et al.
9,616,158 B2 4/2017 Yaghdjian
9,694,123 B2 7/2017 Bourque et al.
9,731,057 B2 8/2017 Garrigue
9,744,279 B2 8/2017 Tamez et al.
9,786,150 B2 10/2017 Kimball et al.
9,861,728 B2 1/2018 Farnan et al.
9,956,333 B2 5/2018 Larose et al.
9,968,720 B2 5/2018 Botterbusch et al.
10,166,319 B2 1/2019 Botterbusch et al.
10,188,779 B1 1/2019 Polverelli et al.
10,398,821 B2 9/2019 Botterbusch et al.
2001/0001278 A1 5/2001 Drevet
2002/0095210 A1 7/2002 Finnegan et al.
2002/0146333 A1 10/2002 Drevet
2002/0165426 A1 11/2002 Sporer et al.
2003/0002325 A1 1/2003 Alvandpour et al.
2004/0002624 A1 1/2004 Yu et al.
2005/0261543 A1 11/2005 Abe et al.
2005/0288543 A1 12/2005 Stenberg et al.
2006/0014999 A1 1/2006 Heilman et al.
2006/0155158 A1 7/2006 Aboul-Hosn
2006/0288543 A1 12/2006 Lubera et al.
2007/0299297 A1 12/2007 Jarvik
2008/0232987 A1 9/2008 Drevet
2009/0082778 A1 3/2009 Beane et al.
2010/0234941 A1 9/2010 Finocchiaro et al.
2010/0241223 A1 9/2010 Lee et al.
2011/0124950 A1 5/2011 Foster
2011/0176945 A1 7/2011 Drevet
2011/0176946 A1 7/2011 Drevet
2011/0260449 A1 10/2011 Pokorney
2012/0220816 A1 8/2012 Peters et al.
2013/0078122 A1 3/2013 Drevet
2013/0178694 A1 7/2013 Jeffery et al.
2013/0314047 A1 11/2013 Eagle et al.
2014/0023533 A1 1/2014 Ishii et al.
2014/0187852 A1 7/2014 Peters et al.
2014/0207232 A1 7/2014 Garrigue
2014/0275723 A1 9/2014 Fritz et al.
2014/0277423 A1 9/2014 Alkhatib et al.
2014/0316426 A1 10/2014 Gollner et al.
2015/0167659 A1 6/2015 Sauer
2015/0330383 A1 11/2015 Letailleur et al.
2016/0038664 A1 2/2016 Callway et al.
2016/0051738 A1 2/2016 Callaway et al.
2016/0235899 A1 8/2016 Yu et al.
2016/0243294 A1 8/2016 Peters et al.
2017/0012491 A1 1/2017 Schob et al.
2017/0266358 A1 9/2017 Aber
2017/0290966 A1 10/2017 Botterbusch et al.
2017/0290967 A1 10/2017 Botterbusch et al.
2017/0296723 A1 10/2017 Garrigue

(56) **References Cited**

U.S. PATENT DOCUMENTS

2018/0038364	A1	2/2018	Dumas et al.
2018/0050143	A1	2/2018	Nguyen et al.
2018/0256798	A1	9/2018	Botterbusch et al.
2018/0369469	A1	12/2018	Le Duc De Lillers et al.
2019/0125949	A1	5/2019	Botterbusch et al.

FOREIGN PATENT DOCUMENTS

EP	0 415 949	B1	3/1991
EP	0 445 782	B1	8/1994
EP	0 925 081	B1	12/2003
EP	0 961 621	B1	7/2004
EP	1 551 500	A1	7/2005
EP	1 233 797	B1	7/2006
EP	1 337 288	B1	3/2008
EP	1 981 585	A1	10/2008
EP	1 644 639	B1	2/2009
EP	2 152 339	B1	2/2010
EP	2 249 746	A1	11/2010
EP	2 310 067	B1	4/2011
EP	2 600 918	A1	6/2013
EP	2 517 739	B1	12/2013
EP	2 704 761	B1	3/2014
EP	2 753 389	A1	7/2014
EP	2 891 502	B1	7/2015
EP	2 736 552	B1	9/2015
EP	2 164 542	B1	8/2016
EP	2 856 190	B1	9/2016
EP	3 145 558	A2	3/2017
FR	355700	A	11/1905
FR	2650862	B1	11/1991
FR	2744769	B1	2/1999
FR	2861910	B1	1/2006
FR	2905147	A1	2/2008
FR	3032917	A1	8/2016
GB	0 662 047	A	11/1951
KR	10-2013-0068373	A	6/2013
WO	WO-89/10763	A1	11/1989
WO	WO-90/08260	A1	7/1990
WO	WO-97/29282	A1	8/1997
WO	WO-99/59652	A1	11/1999
WO	WO-2007/053881	A1	5/2007
WO	WO-2011/056823		5/2011
WO	WO-2017/087717	A1	5/2017
WO	WO-2017/087785	A1	5/2017
WO	WO-2019/092175	A1	5/2019

OTHER PUBLICATIONS

Bozkurt et al., Improving Arterial Pulsatility by Feedback Control of a Continuous Flow Left Ventricular Assist Device Via in silico Modeling, International Journal of Artificial Organs, 37(10):773-785 (2014).

Castellanos et al., Generations of Left Ventricular Assist Devices: The HeartMate Family, Dept. of Bioengineering. Florida Gulf Coast University, BME 3100C, pp. 1-6.

Crow et al., Gastrointestinal Bleeding Rates in Recipients of Nonpulsatile and Pulsatile Left Ventricular Assist Devices, The Journal of Thoracic and Cardiovascular Surgery, 137(1):208-215 (2009).

Fatullayev et al., Continuous-Flow Left Ventricular Assist Device Thrombosis: A Danger Foreseen is a Danger Avoided. Medical Science Monitor Basic Research, 21:141-144 (2015).

Feier et al., A Novel, Valveless Ventricular Assist Device: The Fish Tail Pump. First Experimental In Vivo Studies, Artificial Organs, (26)12:1026-1031 (2002).

Fliess et al., Flatness and Defect of Nonlinear Systems: Introductory Theory and Examples, International Journal of Control, 61(6):1327-1361 (1995).

Fraser et al., A Quantitative Comparison of Mechanical Blood Damage Parameters in Rotary Ventricular Assist Devices: Shear Stress, Exposure Time and Hemolysis Index, Journal of Biomechanical Engineering, 134(8):018002-1 to 018002-11 (2012).

Harris et al., Ventricular Assist Devices, Continuing Education in Anesthesia, Critical Care & Pain, 12(3):145-151 (2012).

International Search Report & Written Opinion dated Jun. 28, 2017 in Int'l PCT Patent Application Serial No. PCT/IB2017/052068.

International Search Report & Written Opinion dated Aug. 22, 2017 in Int'l PCT Patent Application Serial No. PCT/IB2017/052069.

Partial International Search dated Jun. 11, 2018 in Int'l PCT Patent Appl. No. PCT/IB18/052215.

International Search Report and Written Opinion dated Aug. 3, 2018 in Int'l PCT Patent Appl. Serial No. PCT/IB2018/052215.

Int'l Search Report & Written Opinion dated Mar. 4, 2019 in Int'l PCT Patent Appl. Serial No. PCT/IB2018/0592199.

Int'l Search Report & Written Opinion dated Apr. 16, 2019 in Int'l PCT Patent Appl. Serial No. PCT/EP2018/080749. (English Translation of ISR only).

Partial International Search dated Jun. 28, 2017 in Int'l PCT Patent Application Serial No. PCT/IB2017/052069.

Partial International Search and Invitation to Pay Additional Fees dated Feb. 20, 2020 in Int'l PCT Patent Application Serial No. PCT/IB2019/060144.

Ising, M., RPM and Flow Modulation for a Continuous Flow Left Ventricular Assist Device to Increase Vascular Pulsatility: A Computer Simulation, Mock Circulation, and In-Vivo Animal Study, Electronic Theses and Dissertations, University of Louisville (2011).

Islam et al., Left Ventricular Assist Devices and Gastrointestinal Bleeding: A Narrative Review of Case Reports and Case Series, Clinical Cardiology, 36(4):190-200 (2013).

Jorde et al., Identification and Management of Pump Thrombus in the HeartWare Left Ventricular Assist Device System, JACC: Heart Failure, 3(11):849-856 (2015).

Latham et al., Parameter Estimation and a Series of Nonlinear Observers for the System Dynamics of a Linear Vapor Compressor, IEEE Transactions on Industrial Electronics, 63(11):6736-6744 (2016).

Leverett et al., Red Blood Cell Damage by Shear Stress, Biophysical Journal, 12(3):257-273 (1972).

Malehsa et al., Acquired von Willebrand Syndrome After Exchange of the HeartMate XVE to the HeartMate II Ventricular Assist Device, European Journal of Cardio-Thoracic Surgery, 35(6):1091-1093 (2009).

Mancini et al., Left Ventricular Assist Devices, A Rapidly Evolving Alternative to Transplant, Journal of the American College of Cardiology, 653:2542-2555 (2015).

Mboup et al., Numerical Differentiation With Annihilators in Noisy Environment, Numerical Algorithms, 50(4):439-467 (2009).

Menhour et al., An Efficient Model-Free Setting for Longitudinal and Lateral Vehicle Control: Validation Through the Interconnected Pro-SiVIC/RTMaps Prototyping Platform, IEEE Transactions on Intelligent Transportation Systems, 19(2:461-475 (2018).

Mercorelli, P., A Motion-Sensorless Control for Intake Valves in Combustion Engines, IEEE Transactions on Industrial Electronics, 64(4):3402-3412 (2017).

Mercorelli, P., An Adaptive and Optimized Switching Observer for Sensorless Control of an Electromagnetic Valve Actuator in Camless Internal Combustion Engines, Asian Journal of Control, 16(4):959-973 (2014).

Mohite, et al., Does CircuLite Synergy assist device as partial ventricular support have a place in modern management of advanced heart failure?, Expert Rev. Med. Devices, published online Dec. 2, 2014, pp. 1-12.

Najjar, et al., An Analysis of Pump Thrombus Events in Patients in HeartWare ADVANCE Bridge to Transplant and Continued Access Protocol Trial, The Journal of Heart and Lung Transplantation, vol. 33(1):23-34 (2014).

Pagani, Francis D., MD, PhD, Department of Cardiac Surgery, University of Michigan, "Technology 101: Review of Current Technologies, Types of Flow, Pump Parameters," American Association for Thoracic Surgery, Annual Meeting (2014), Cardiothoracic Transplant and Mechanical Circulatory Support of Heart and Lung Failure.

(56) **References Cited**

OTHER PUBLICATIONS

Perschall, et al., The Progressive Wave Pump: Numerical Multiphysics Investigation of a Novel Pump Concept With Potential to Ventricular Assist Device Application, Artificial Organs, 35(9):E179-E190 (2012).
Rahman, et al., Position Estimation in Solenoid Actuators, IEEE Transactions on Industry Applications, 32(3):552-559 (1996).
Rigatos, G., "Differential Flatness Theory ad Flatness-Based Control," in Nonlinear Control and Filtering Using Differential Flatness Approaches, vol. 25, Chapter 2, pp. 47-101 (Springer Int'l Publishing 2015).
Wang et al., Rotary Blood Pump Control Strategy for Preventing Left Ventricular Suction, ASAIO Journal, vol. 61, No. 1, pp. 21-30 (2015).
Wang, Quadrotor Analysis and Model Free Control with Comparisons, Université Paris Sud—Paris XI, (2014).
Weidemann, Daniel, Thesis entitled "Permanent Magnet Reluctance Actuators for Vibration Testing," completed at the Institute of Applied Mechanics, Technische Universität Munchen, Apr. 2013.
Yuan et al., The Spectrum of Complications Following Left Ventricular Assist Device Placement, Journal of Cardiac Surgery, 27:630-638 (2012).
Zhang et al., Study on Self-Sensor of Linear Moving Magnet Compressor's Piston Stroke, IEEE Sensors Journal, 9(2):154-158 (2009).
U.S. Appl. No. 15/484,101 / U.S. Pat. No. 9,968,720, filed Apr. 10, 2017 / Issue Date May 15, 2018.
U.S. Appl. No. 15/484,108 / U.S. Pat. No. 10,166,319, filed Apr. 10, 2017 / Issue Date Jan. 1, 2019.
U.S. Appl. No. 15/940,856, filed Mar. 29, 2018.
U.S. Appl. No. 15/953,269 / U.S. Pat. No. 10,188,779, filed Apr. 13, 2018 / Issue Date Jan. 29, 2019.
U.S. Appl. No. 15/976,831 / U.S. Pat. No. 10,398,821, filed May 10, 2018 / Issue Date Sep. 3, 2019.
U.S. Appl. No. 16/234,519, filed Dec. 27, 2018.
U.S. Appl. No. 16/557,711, filed Aug. 30, 2019.
International Search Report and Written Opinion dated Jun. 25, 2020 in International PCT Patent Application Serial No. PCT/IB2020/052337.

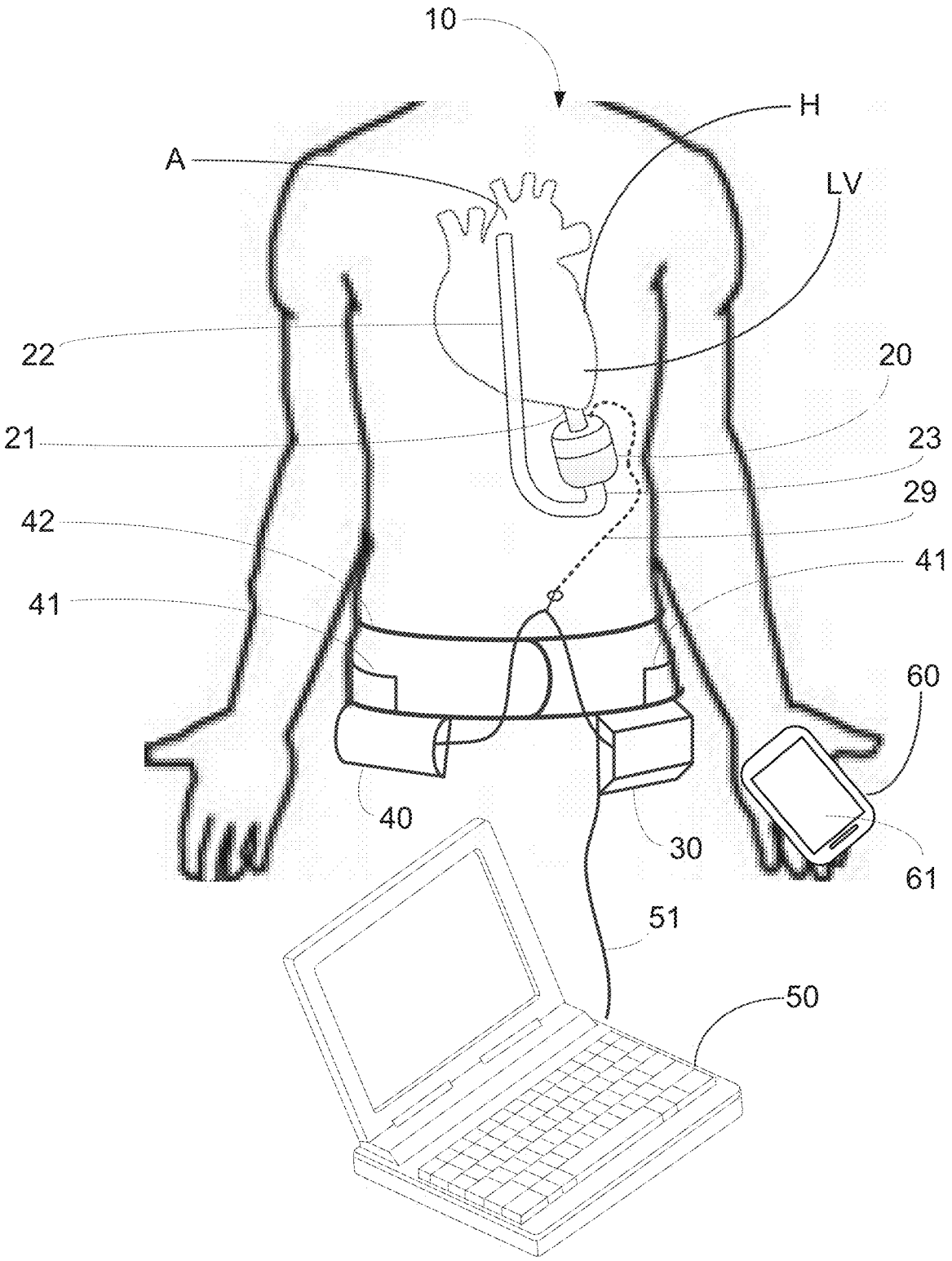

FIG. 1

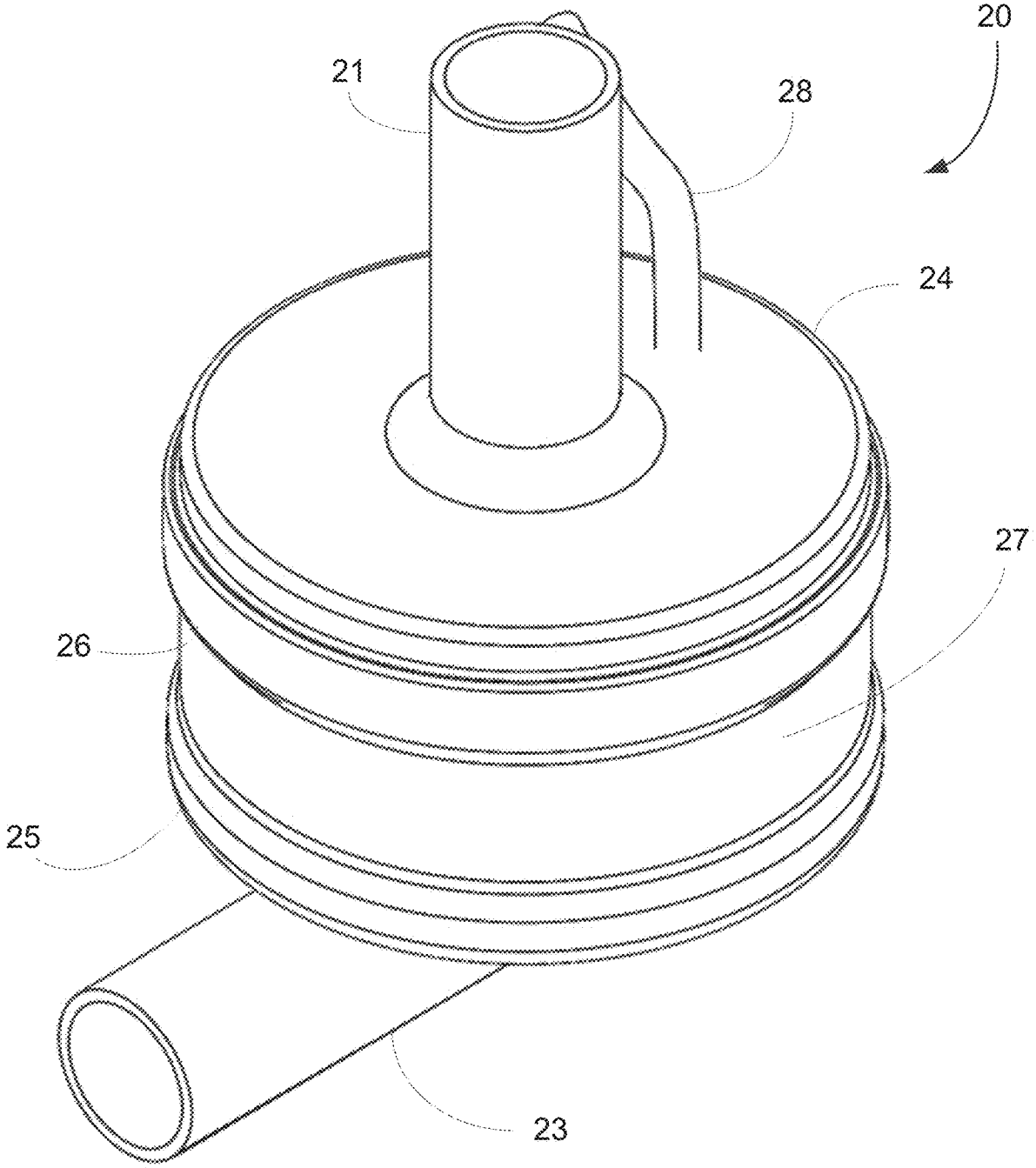

FIG. 2

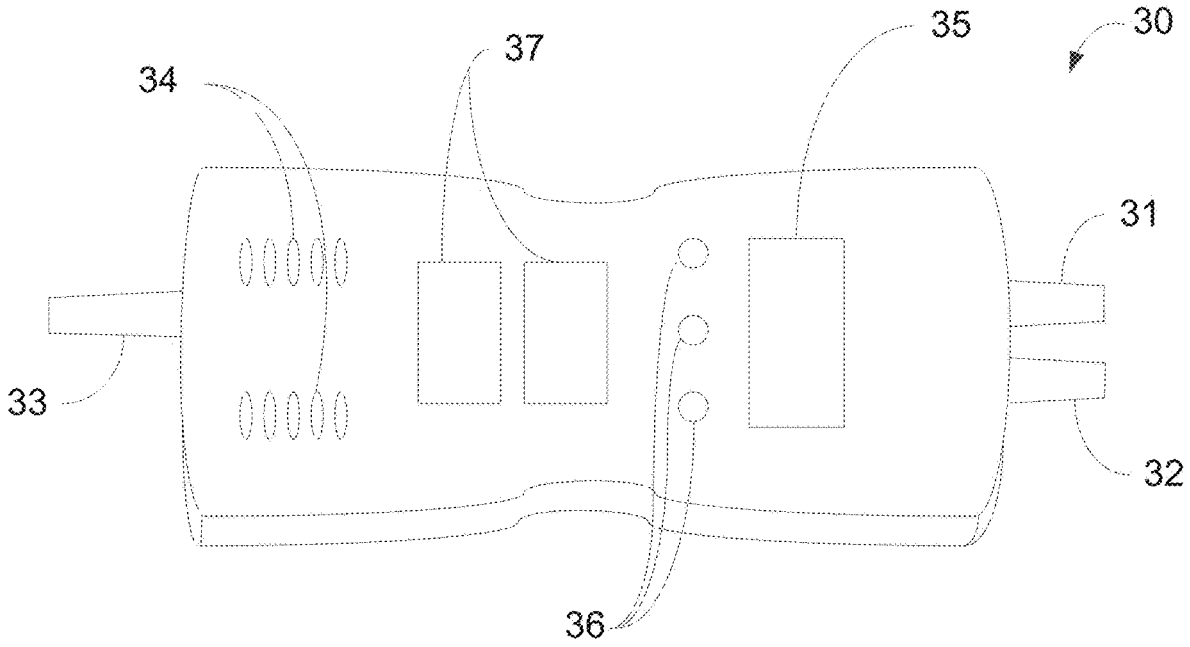
30
35
37
34
31
33
32
36

FIG. 3A

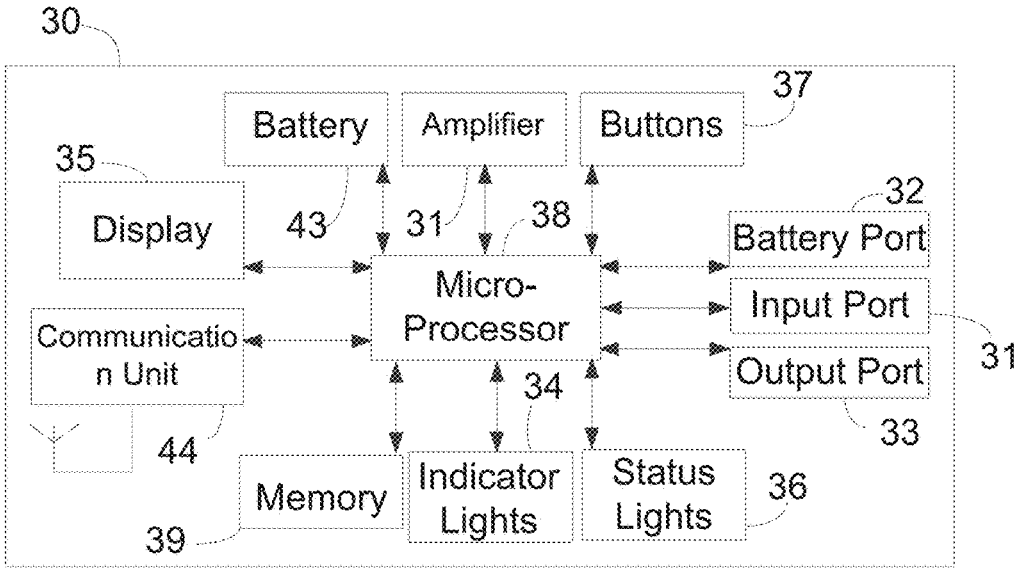
30
Battery
Amplifier
Buttons
37
35
Display
43
31
38
32
Battery Port
Micro-
Processor
Input Port
Communicatio
n Unit
Output Port
31
34
44
33
Memory
Indicator
Lights
Status
Lights
36
39

FIG. 3B

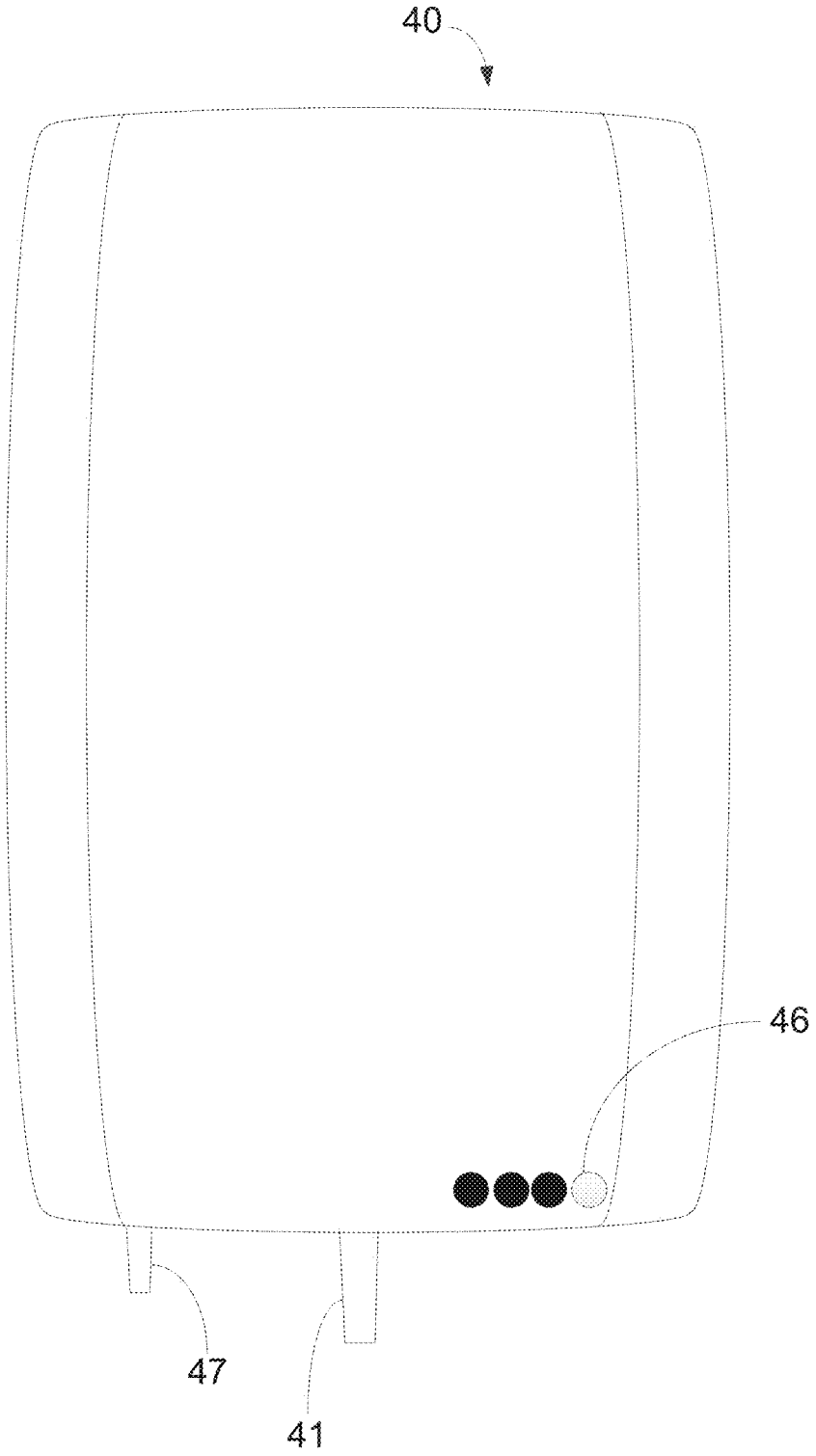

FIG. 4

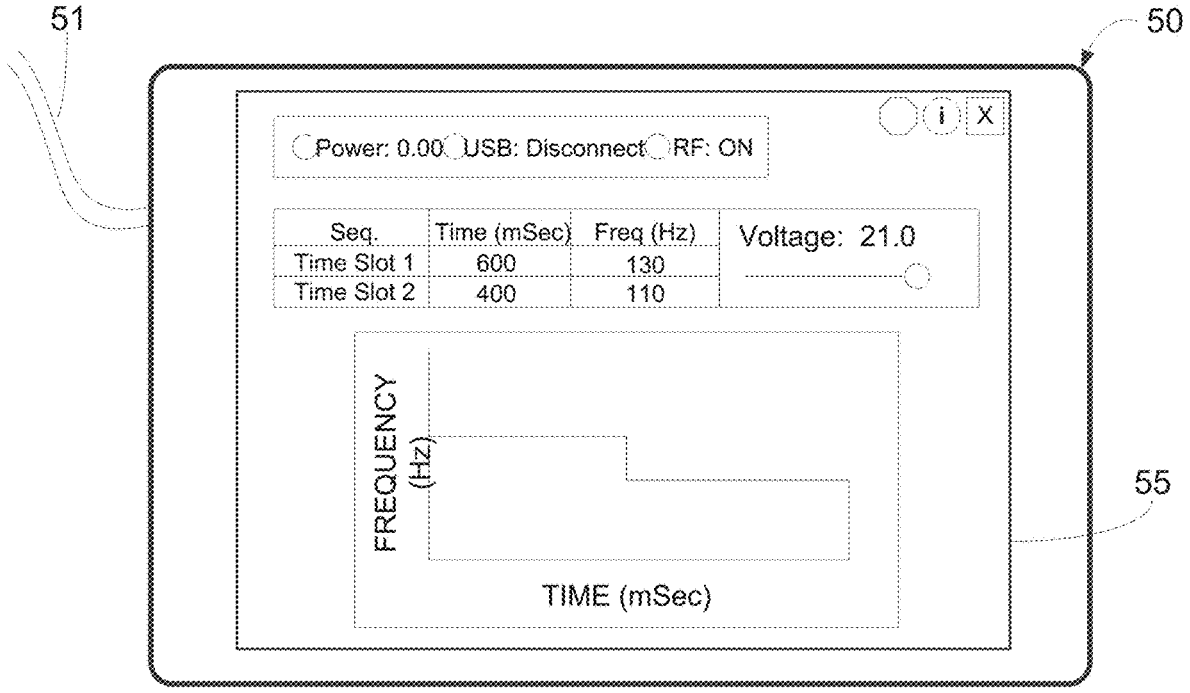
51
50
Power: 0.00
USB: Disconnect
RF: ON
i
X
Seq.
Time (mSec)
Freq (Hz)
Time Slot 1
600
130
Time Slot 2
400
110
Voltage: 21.0
FREQUENCY (Hz)
TIME (mSec)
55

FIG. 5A

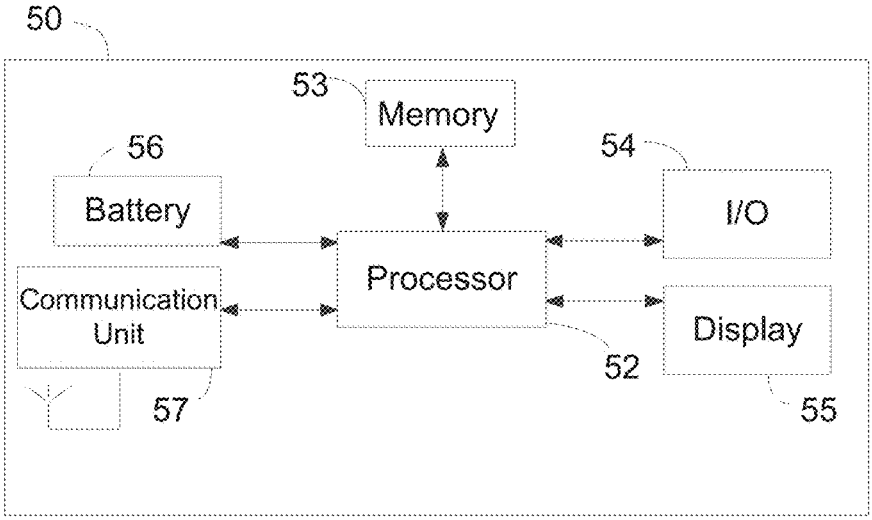
50
53
Memory
56
Battery
54
I/O
Processor
Communication Unit
Display
52
57
55

FIG. 5B

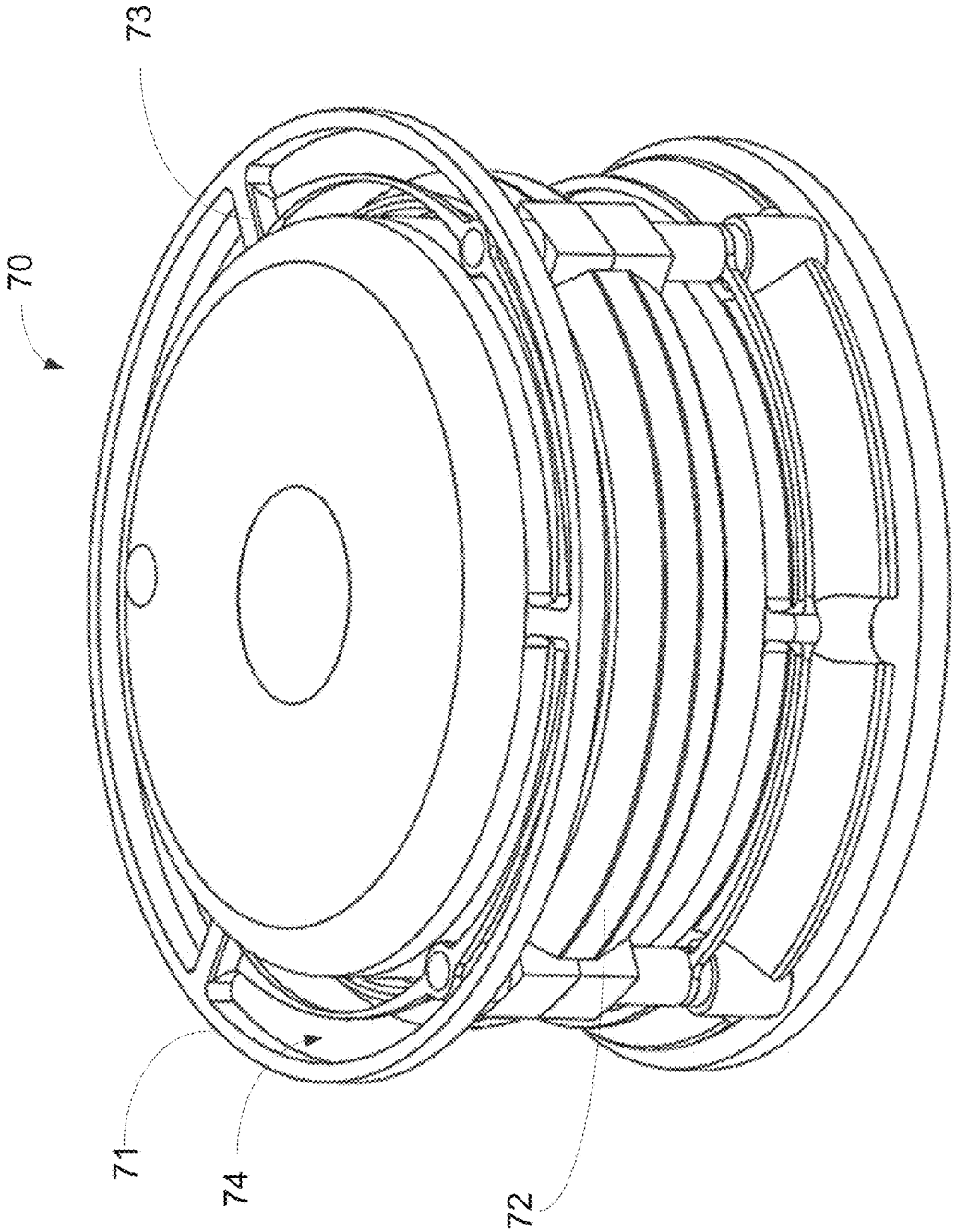

FIG. 6

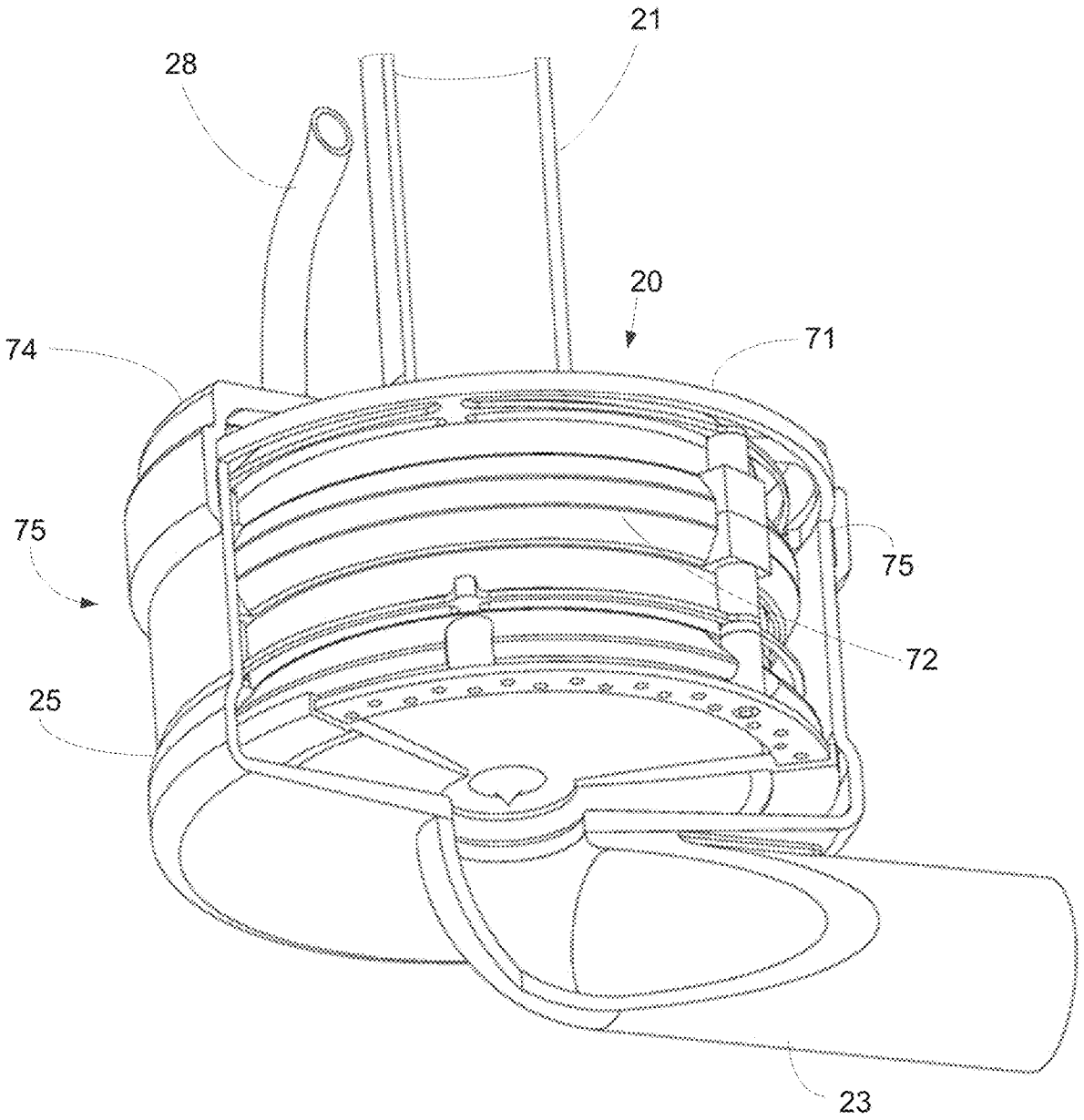

FIG. 7

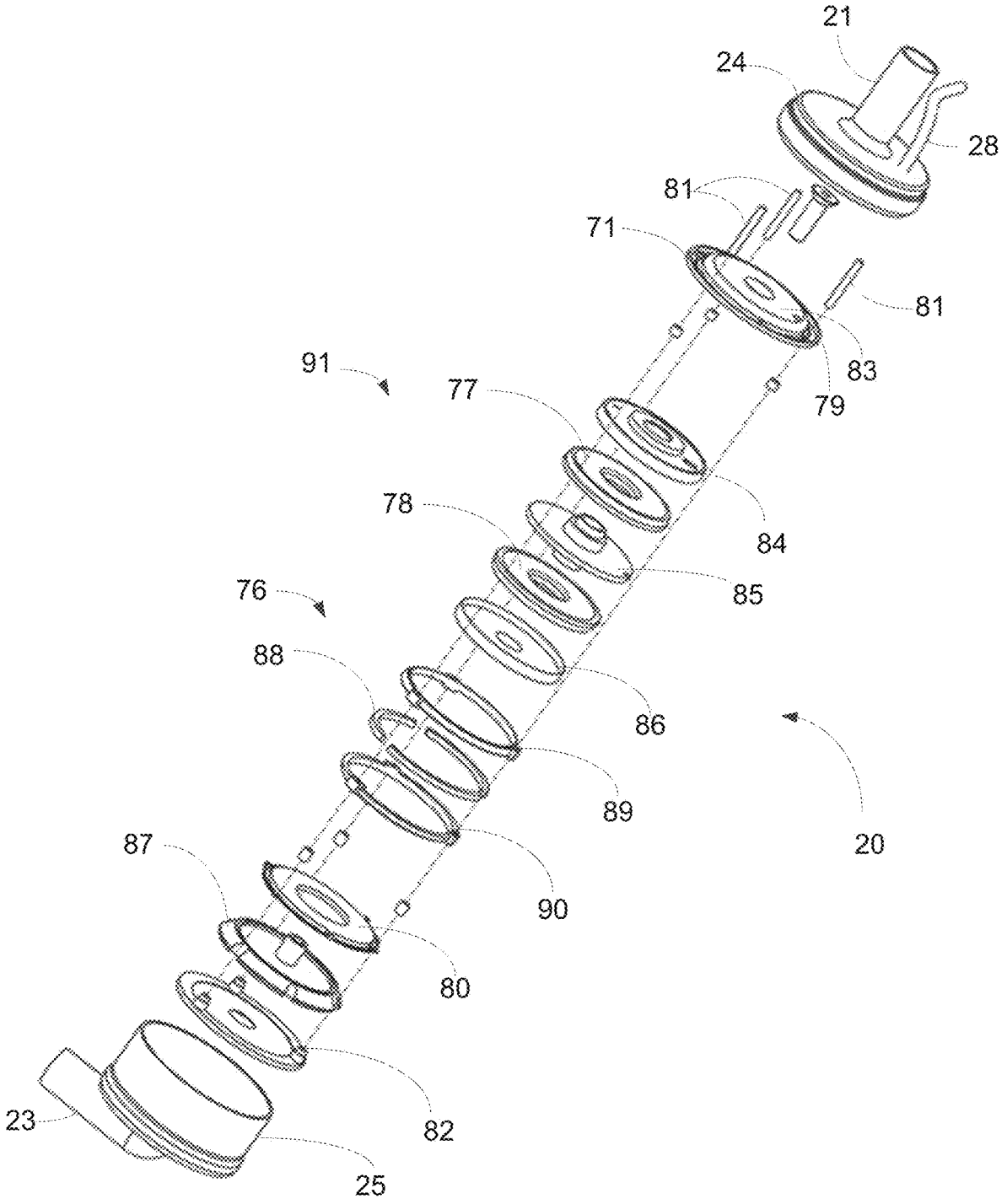

FIG. 8

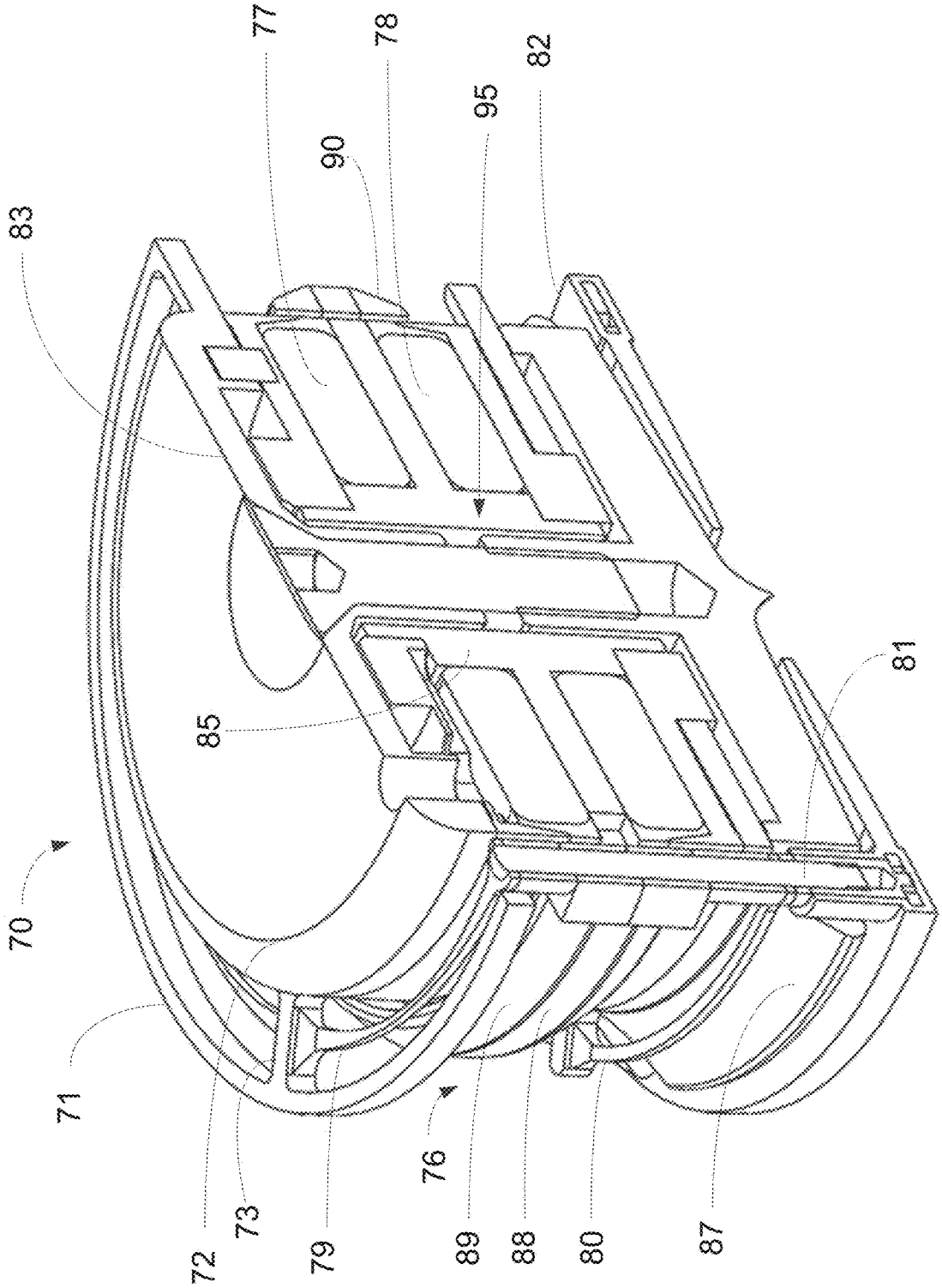

FIG. 9

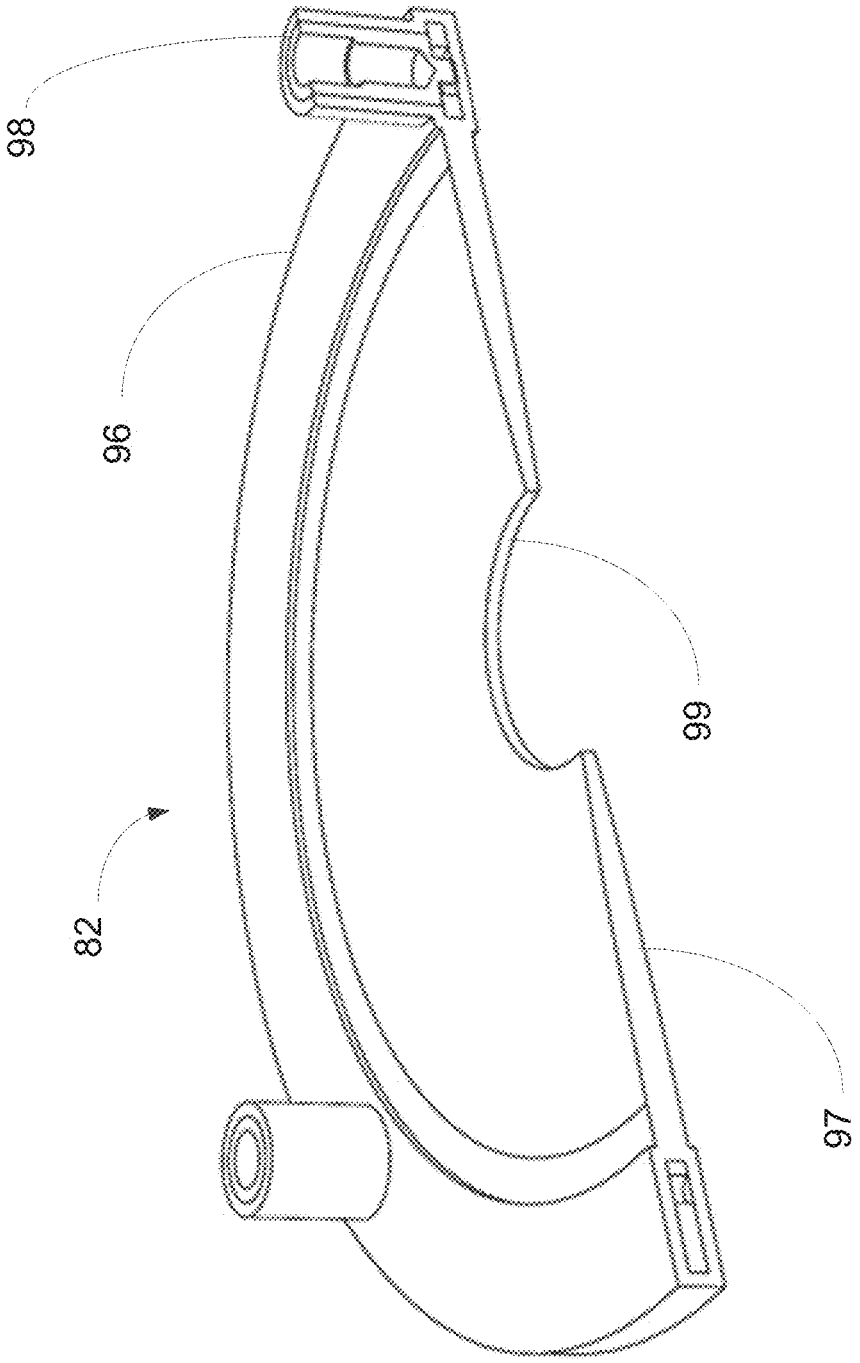

FIG. 10

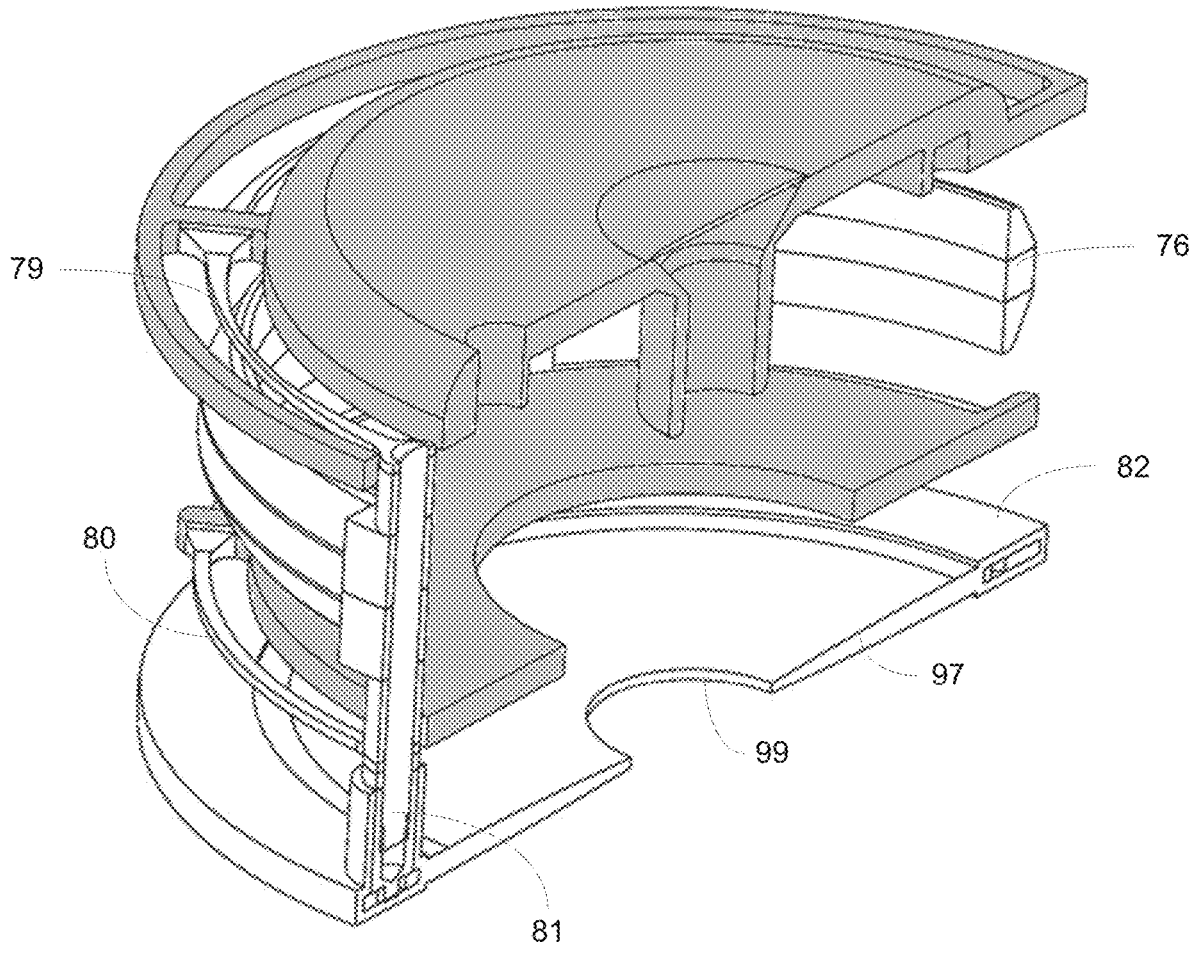

FIG. 11

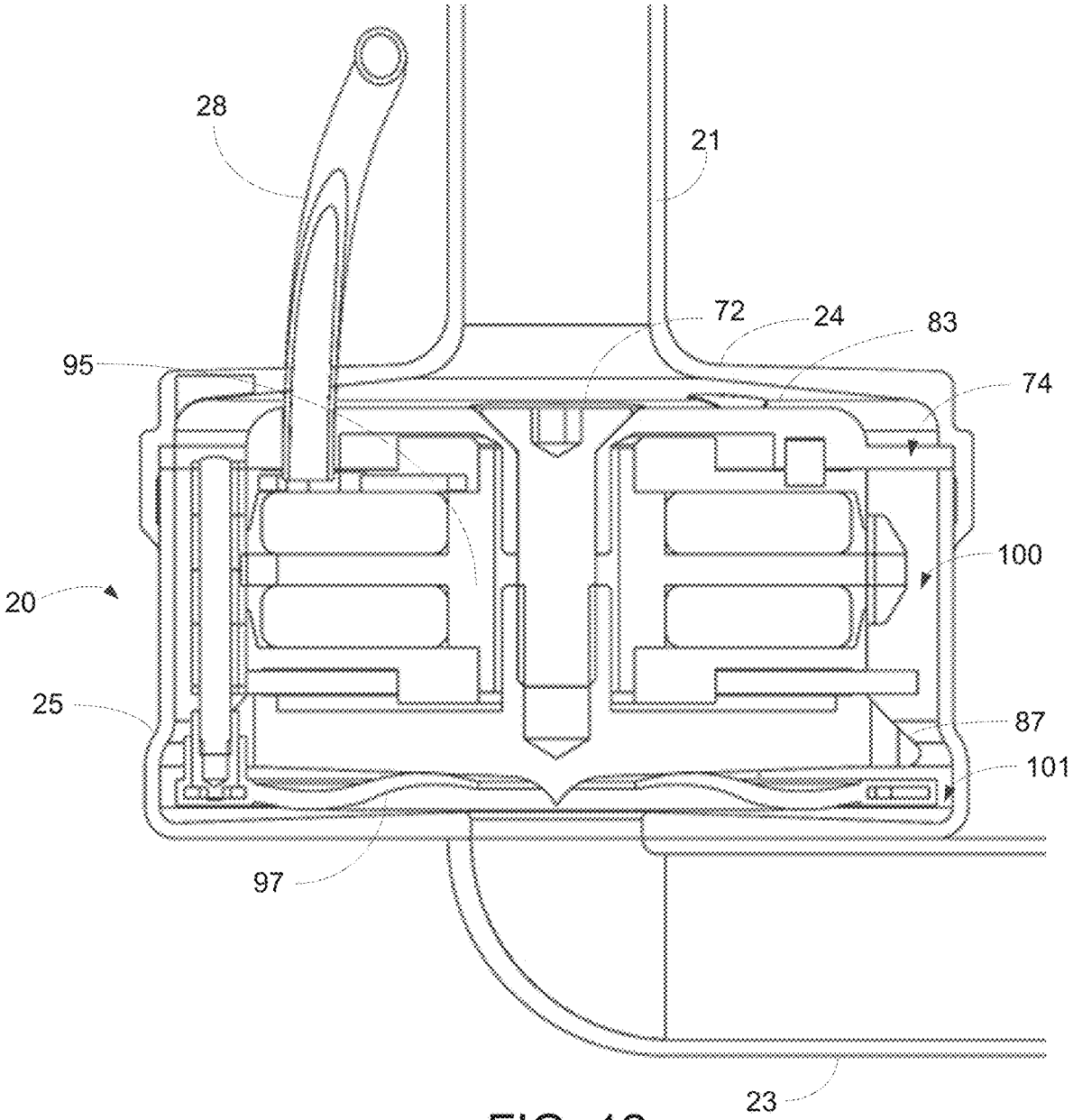

FIG. 12

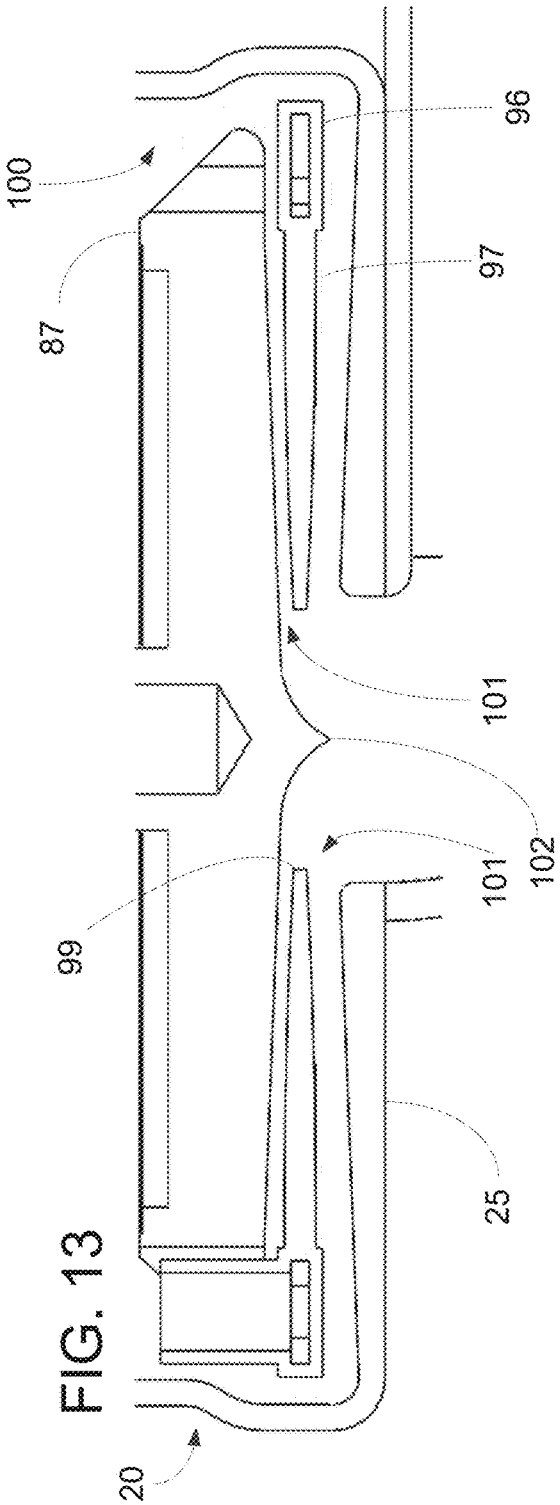
100
87
96
97
101
102
101
99
25
20

FIG. 13

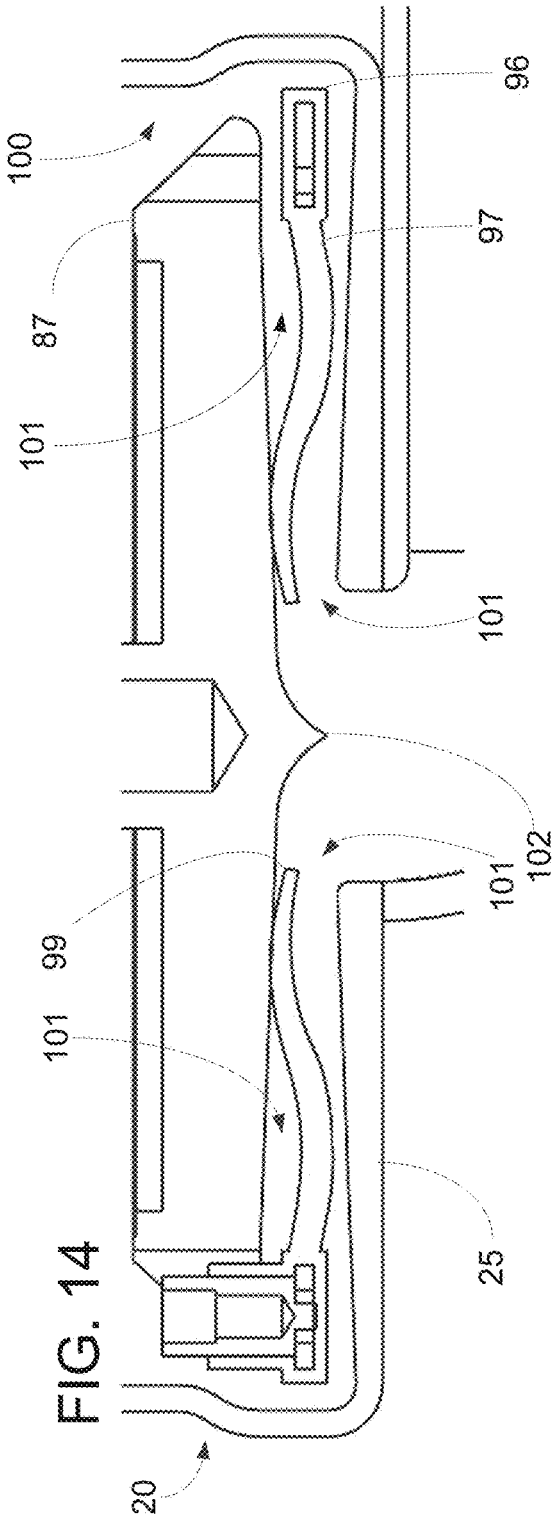
100
87
96
97
101
101
102
101
99
25
20

FIG. 14

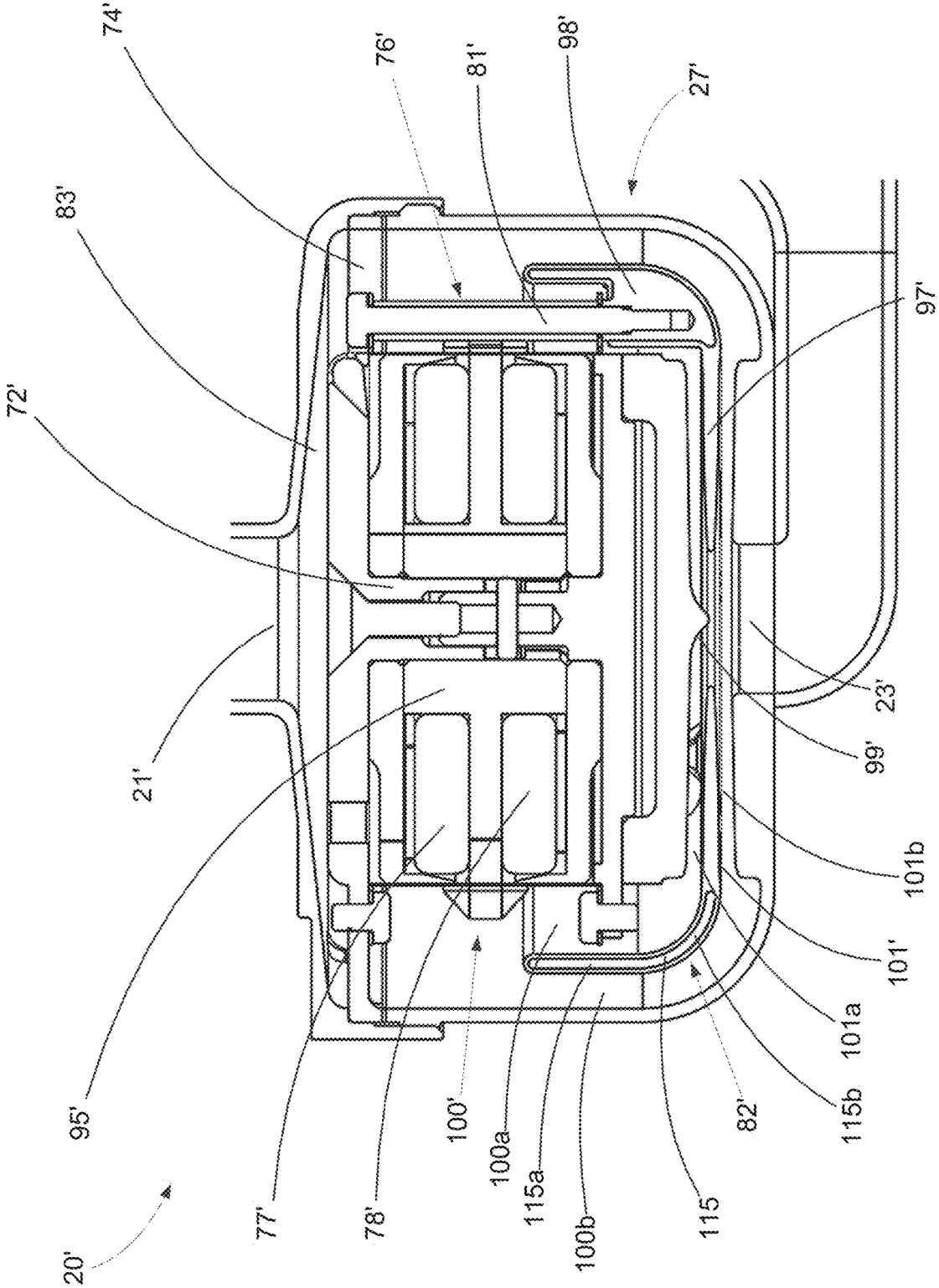
74'
76'
81'
98'
27'
83'
97'
72'
23'
99'
21'
101b
101'
101a
95'
115b
82'
100'
100a
115a
100b
115
77'
78'
20'

FIG. 15A

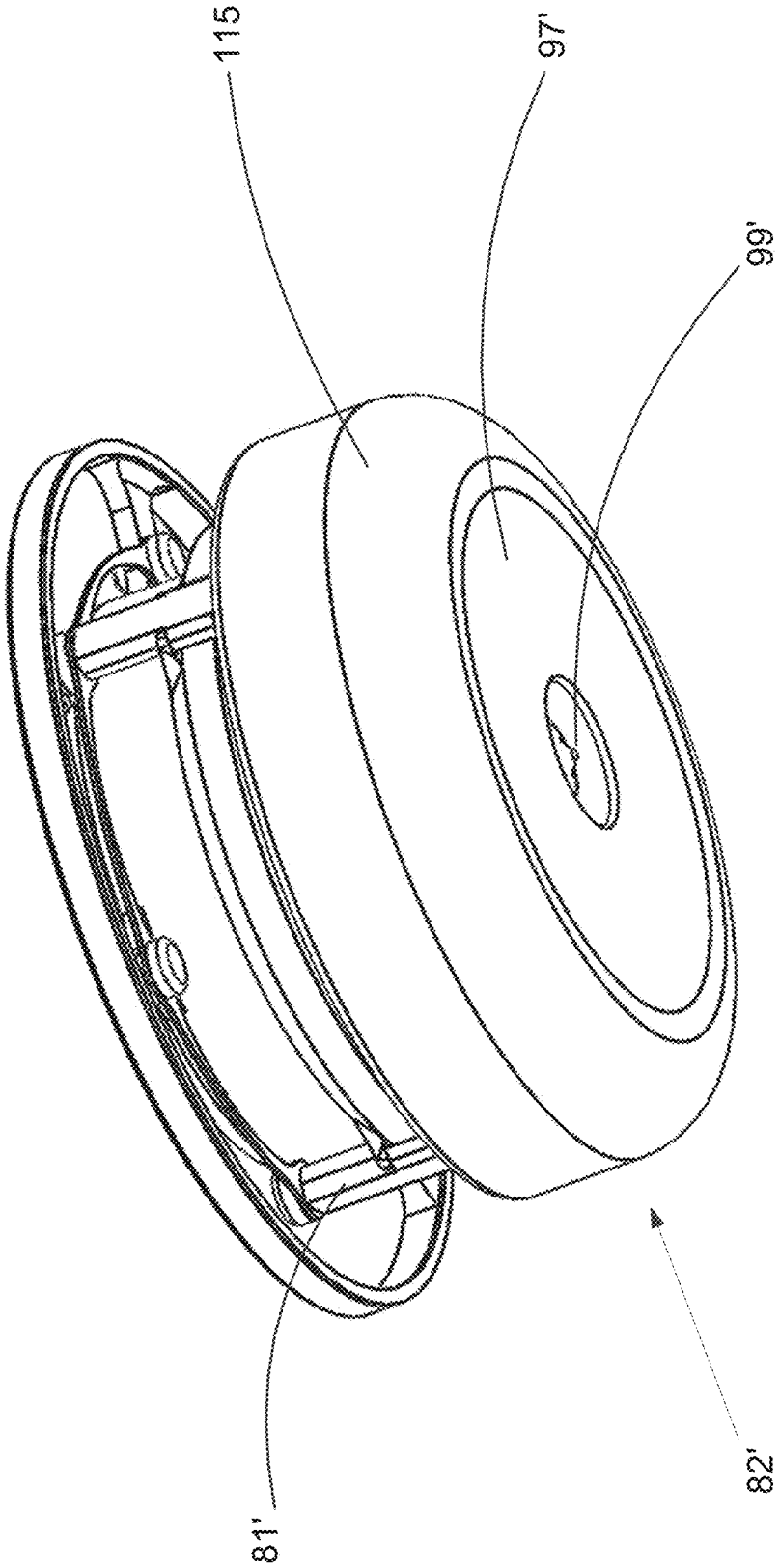

FIG. 15B

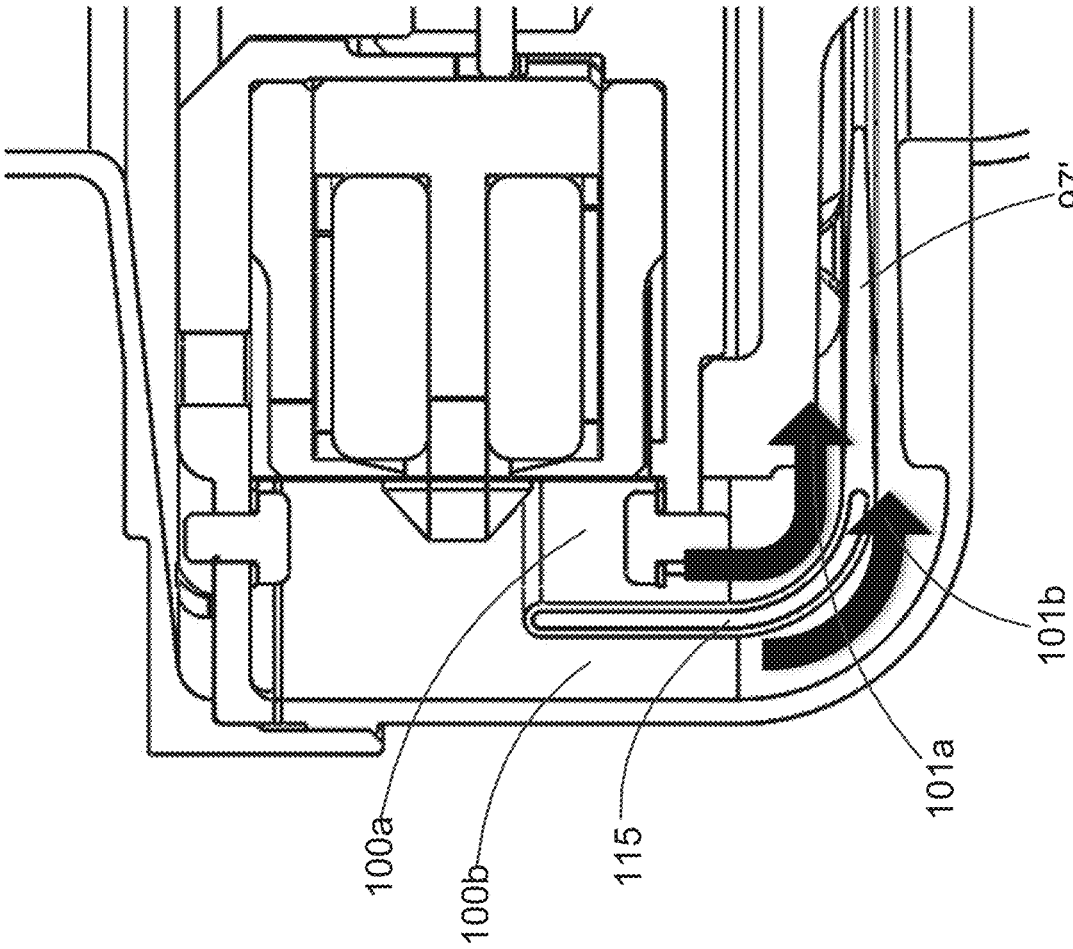

FIG. 16B

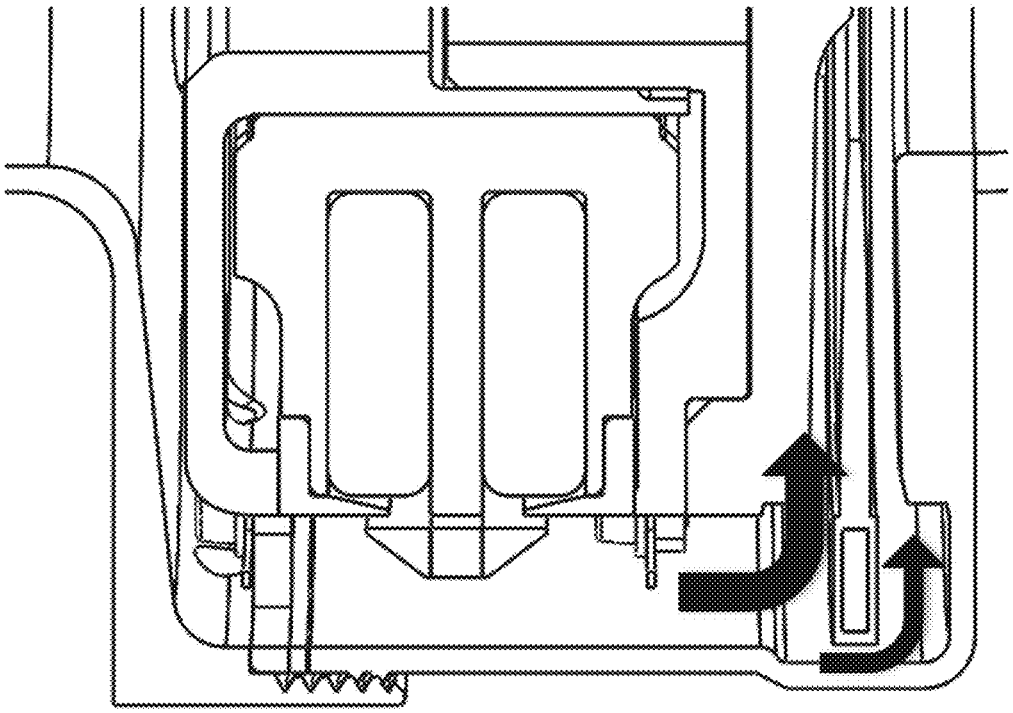

FIG. 16A

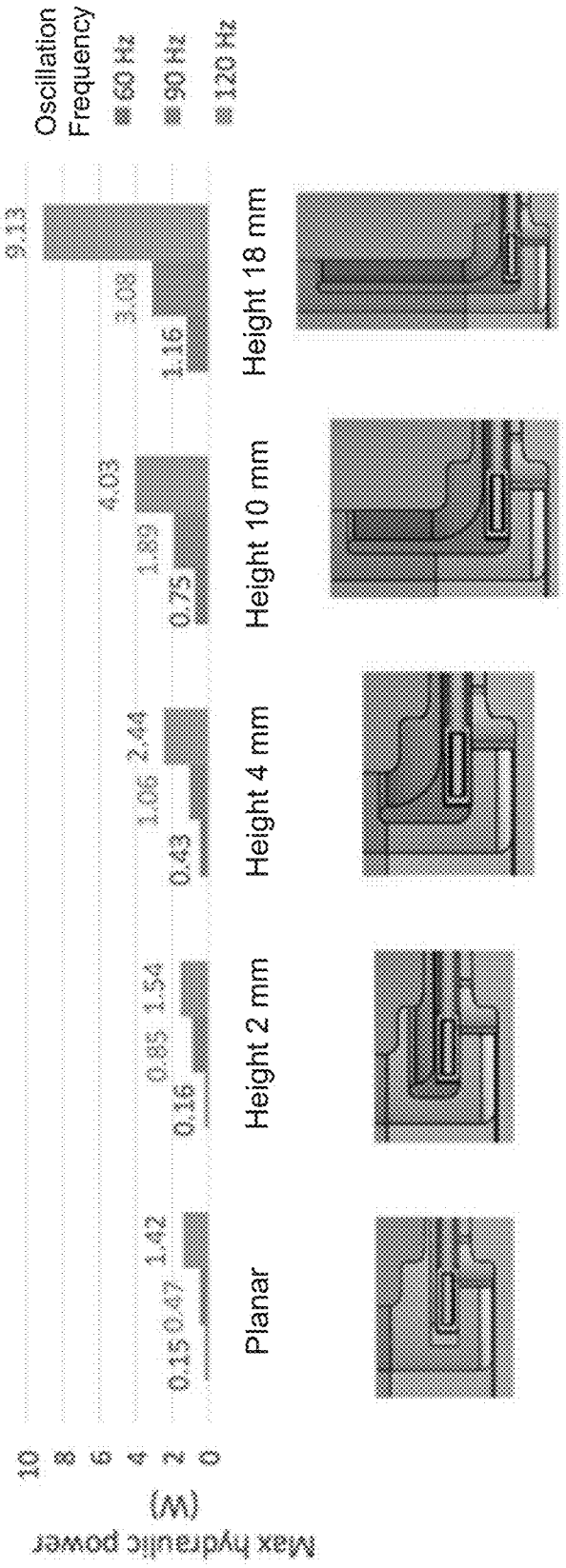
Max hydraulic power (W)
10
8
6
4
2
0
0.15
0.47
1.42
0.16
0.85
1.54
0.43
1.06
2.44
0.75
1.89
4.03
1.16
3.08
9.13
Planar
Height 2 mm
Height 4 mm
Height 10 mm
Height 18 mm
Oscillation Frequency
60 Hz
90 Hz
120 Hz

FIG. 17

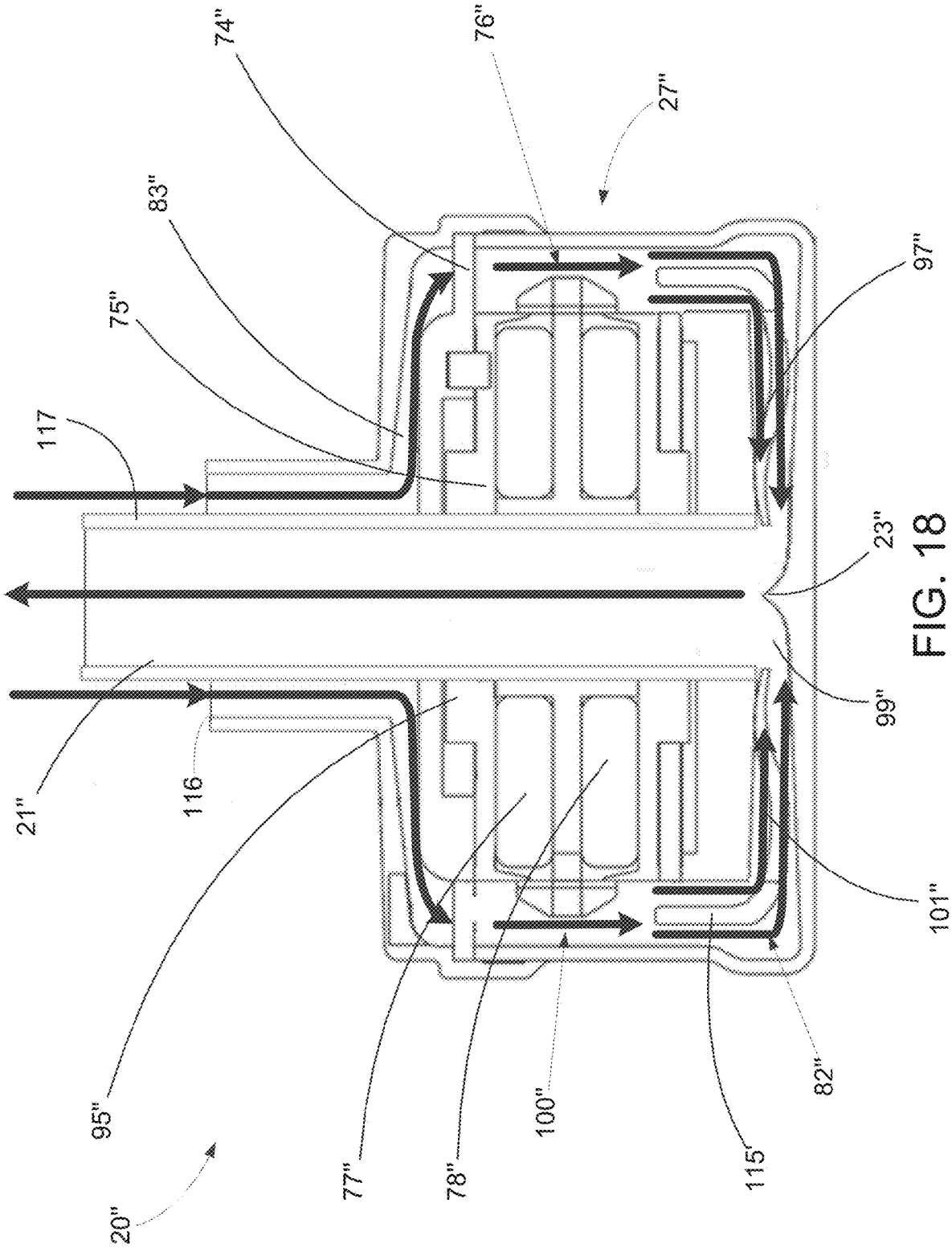

FIG. 18

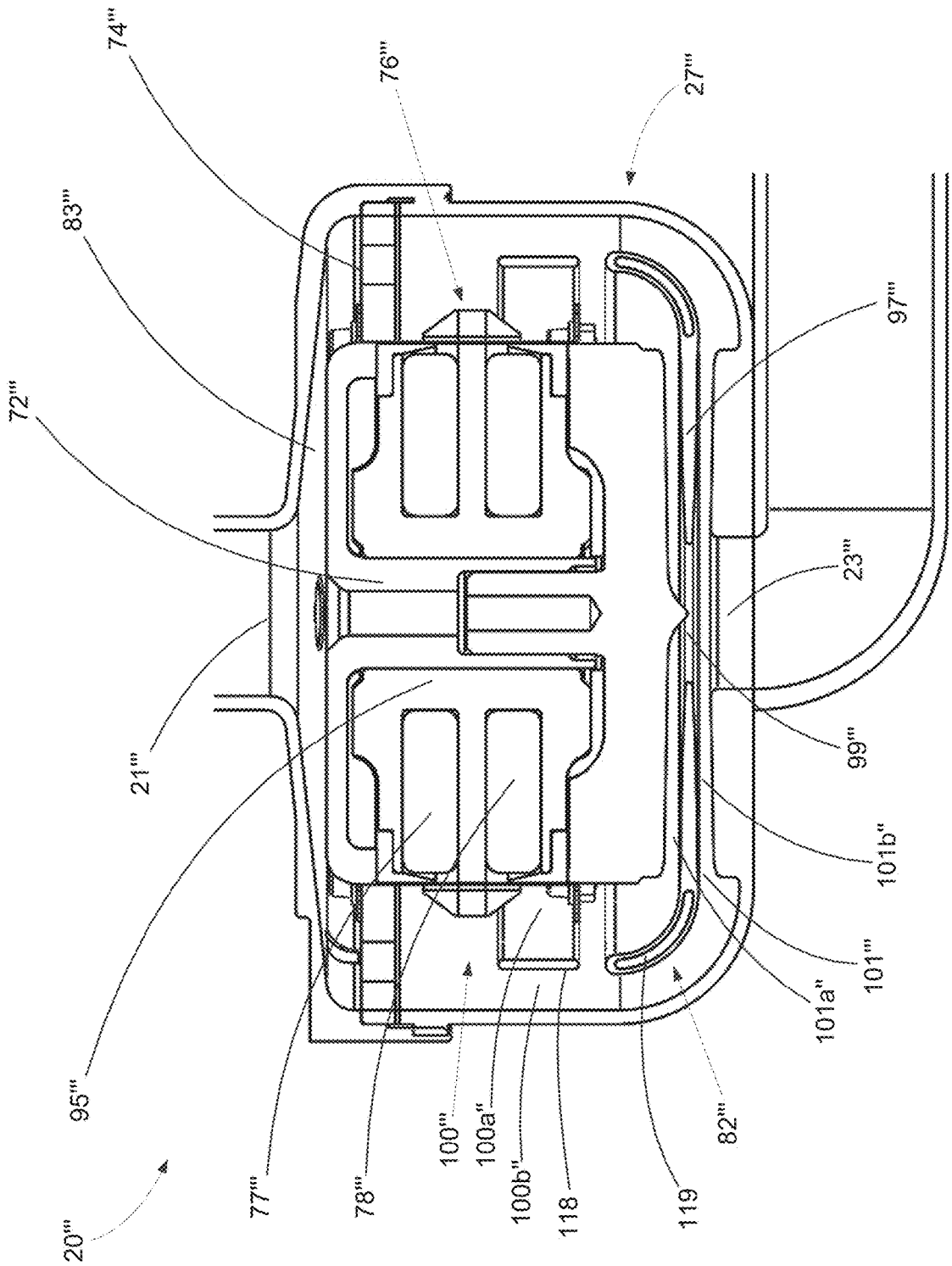
74'''
76'''
27'''
83'''
97'''
72'''
23'''
21'''
99'''
101b''
101'''
101a''
95'''
82'''
100'''
100a''
100b''
118
119
77'''
78'''
20'''

FIG. 19

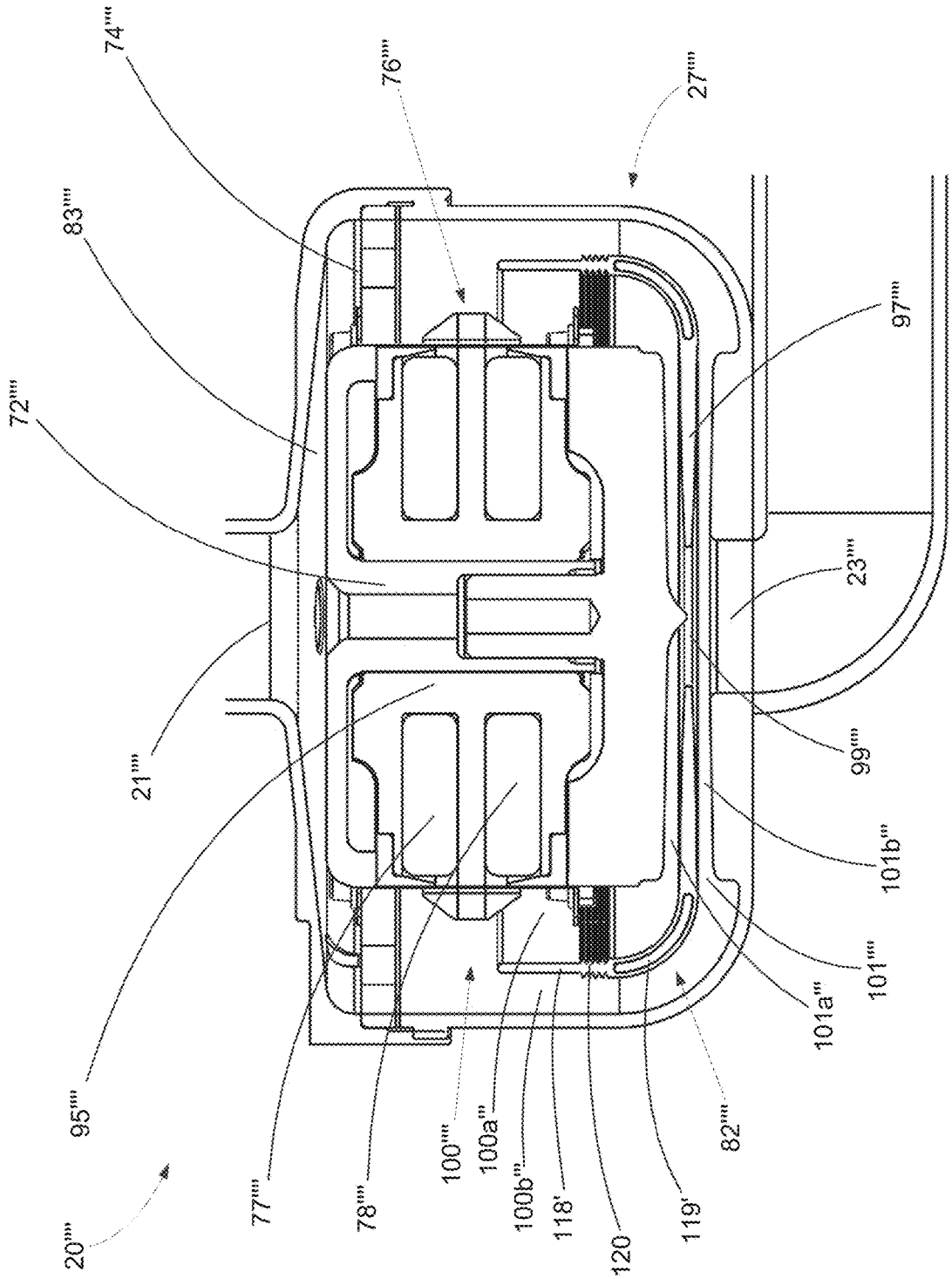
74''''
76''''
27''''
83''''
97''''
72''''
23''''
21''''
99''''
101b''''
101''''
101a''''
95''''
82''''
20''''
77''''
78''''
100''''
100a''''
100b''''
118'
120
119'

FIG. 20

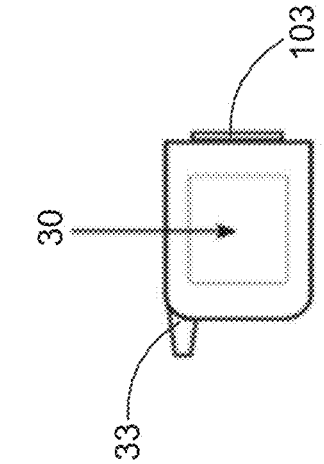

FIG. 21A

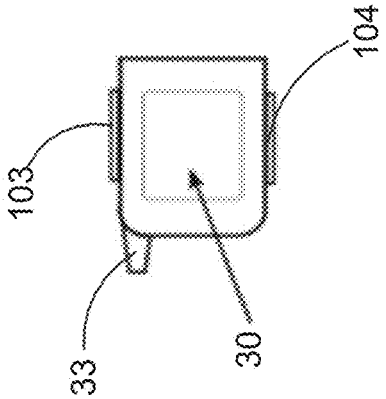

FIG. 21B

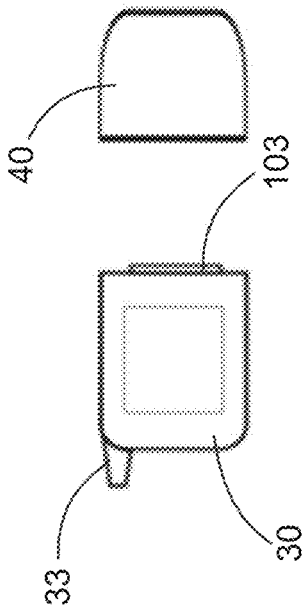

FIG. 21C

FIG. 21D

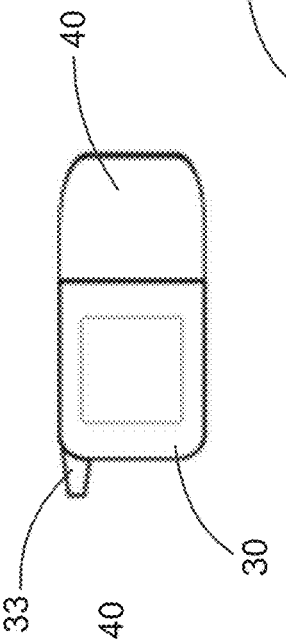

FIG. 21E

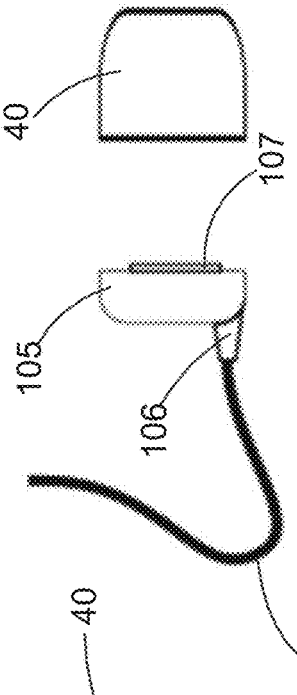

FIG. 21F

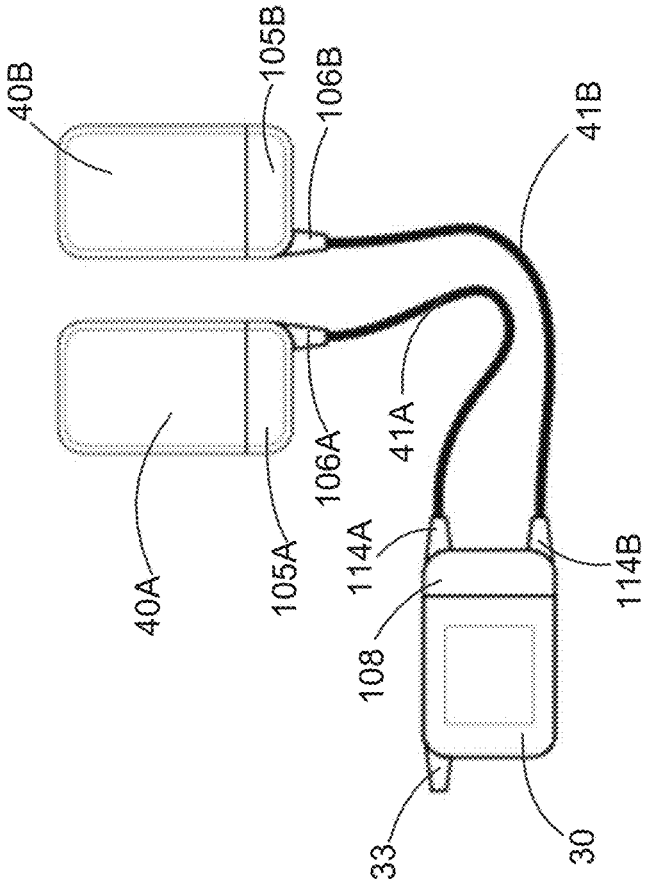

FIG. 21H

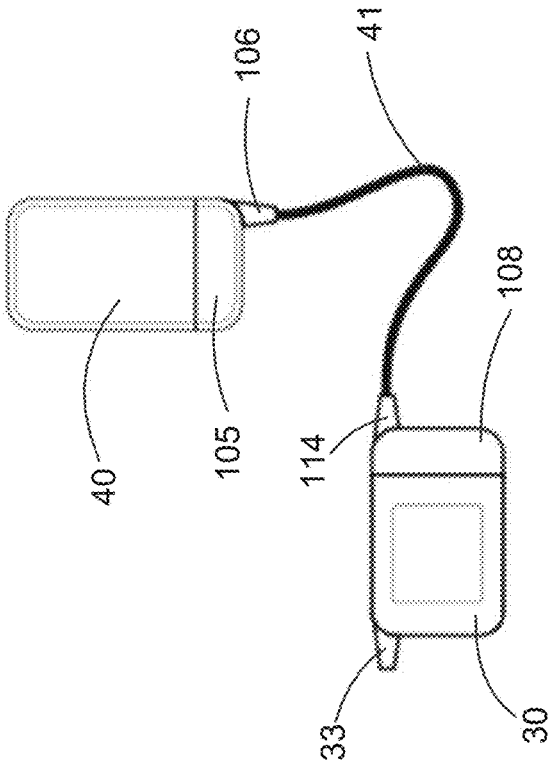

FIG. 21G

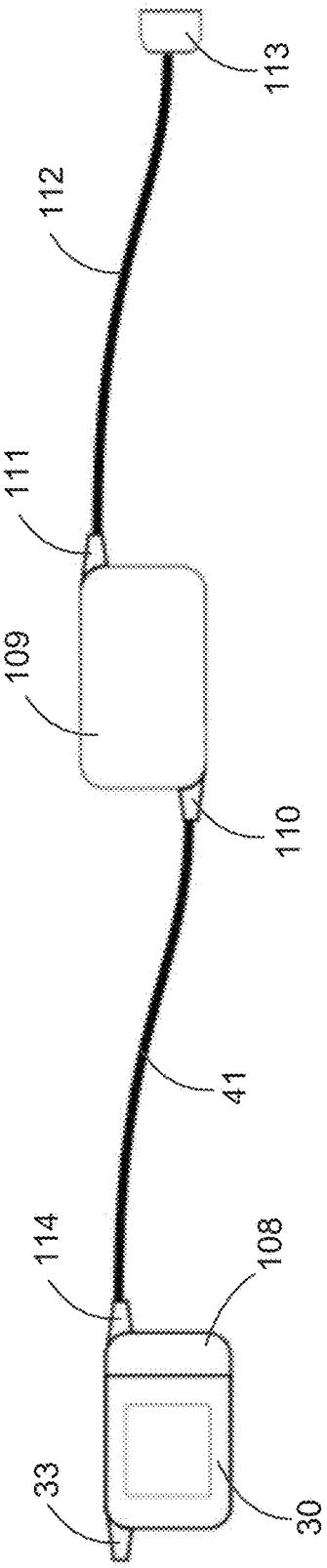

FIG. 21I

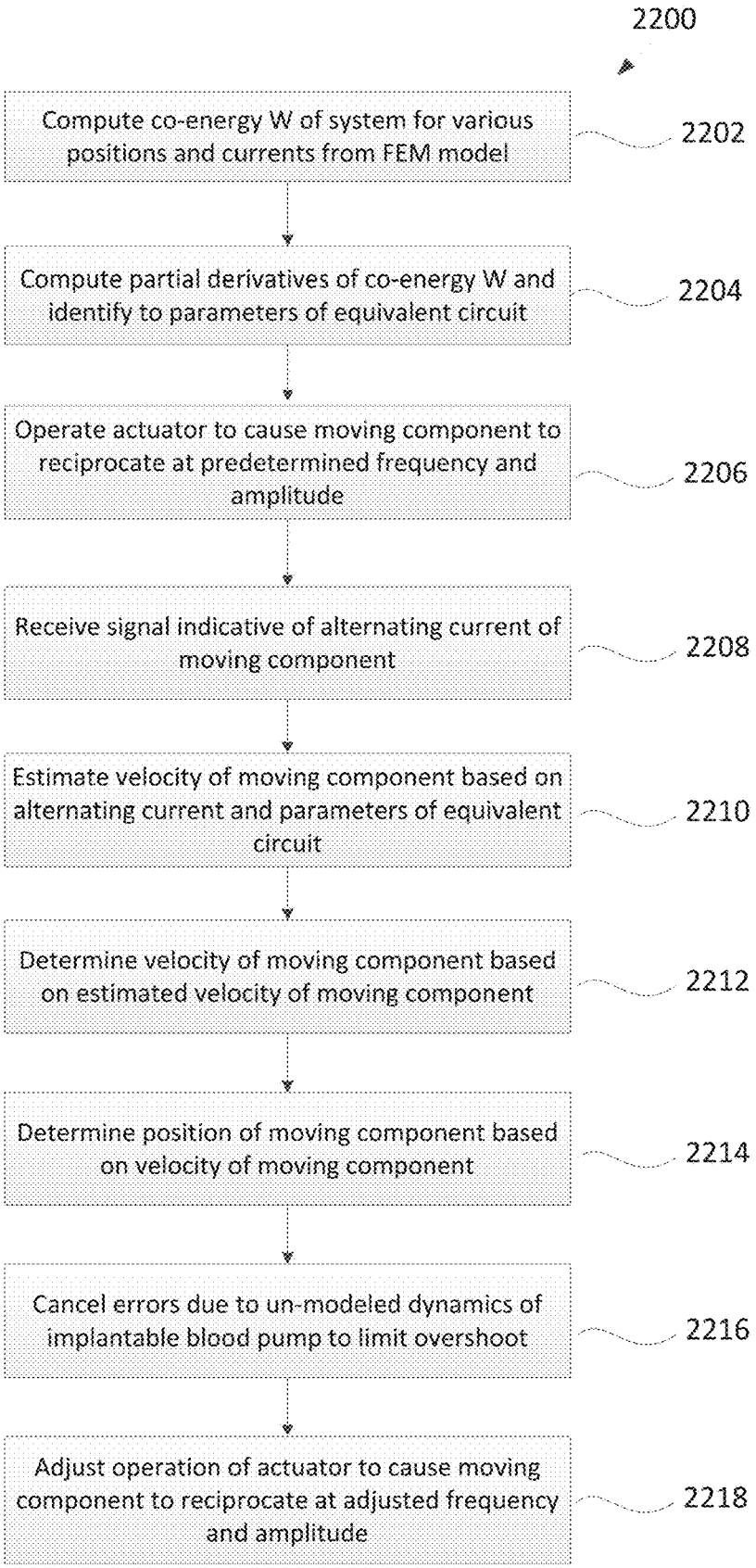
2200
Compute co-energy W of system for various positions and currents from FEM model
2202
Compute partial derivatives of co-energy W and identify to parameters of equivalent circuit
2204
Operate actuator to cause moving component to reciprocate at predetermined frequency and amplitude
2206
Receive signal indicative of alternating current of moving component
2208
Estimate velocity of moving component based on alternating current and parameters of equivalent circuit
2210
Determine velocity of moving component based on estimated velocity of moving component
2212
Determine position of moving component based on velocity of moving component
2214
Cancel errors due to un-modeled dynamics of implantable blood pump to limit overshoot
2216
Adjust operation of actuator to cause moving component to reciprocate at adjusted frequency and amplitude
2218

FIG. 22

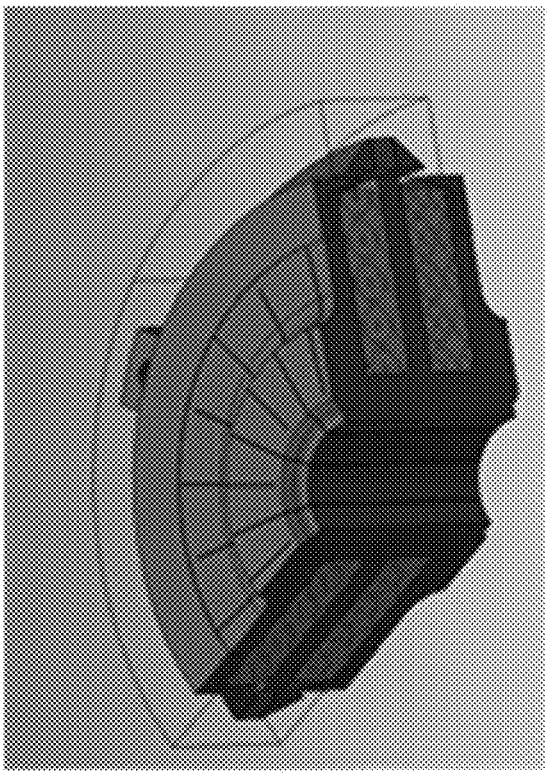

FIG. 23

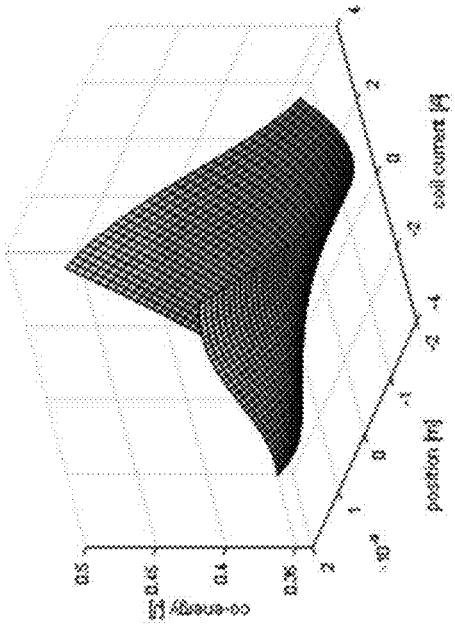

FIG. 24A

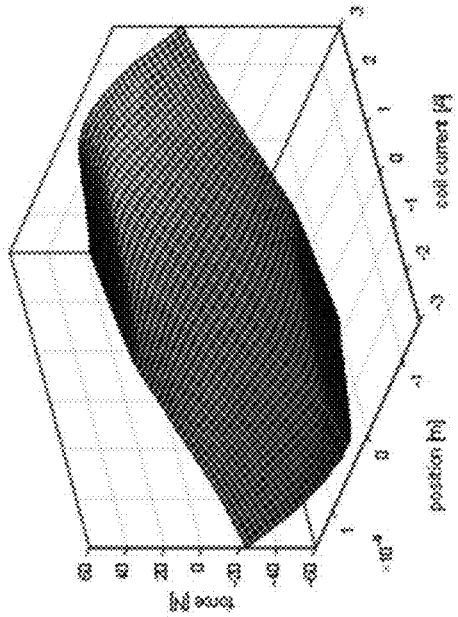

FIG. 24B

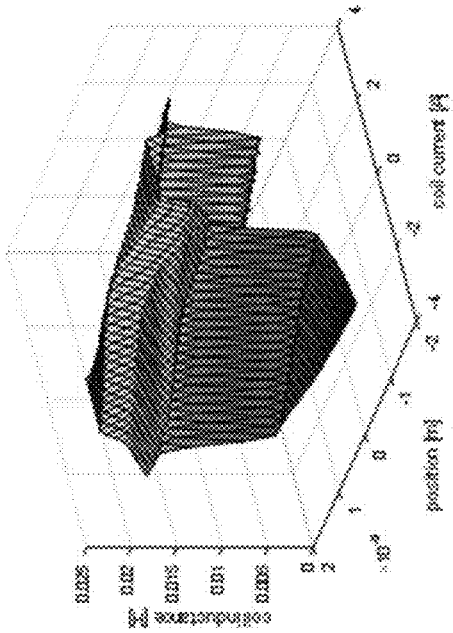

FIG. 24C

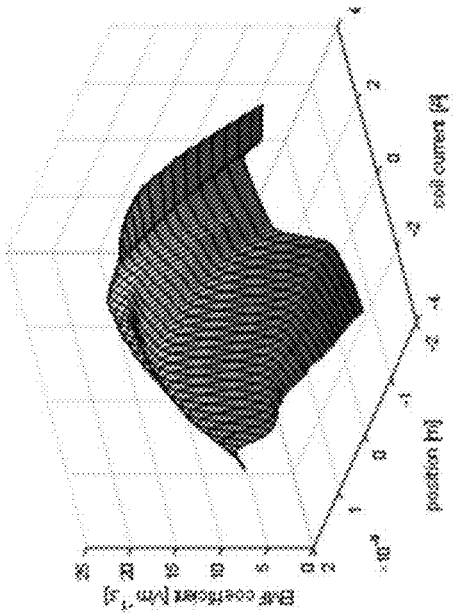

FIG. 24D

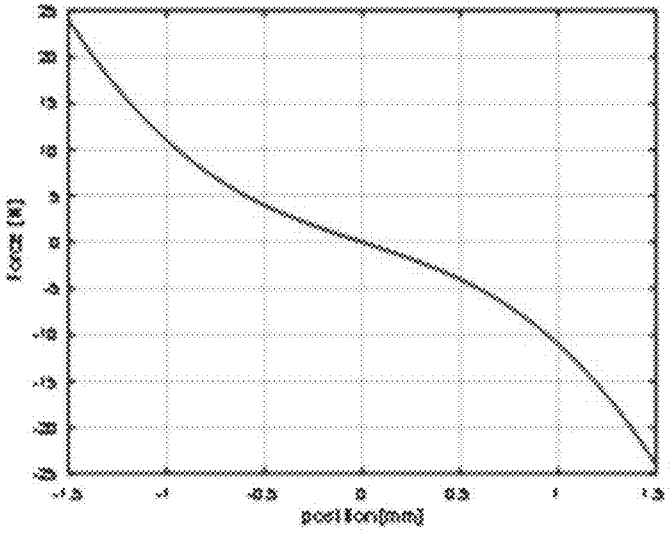
force [N]
position[mm]

FIG. 25

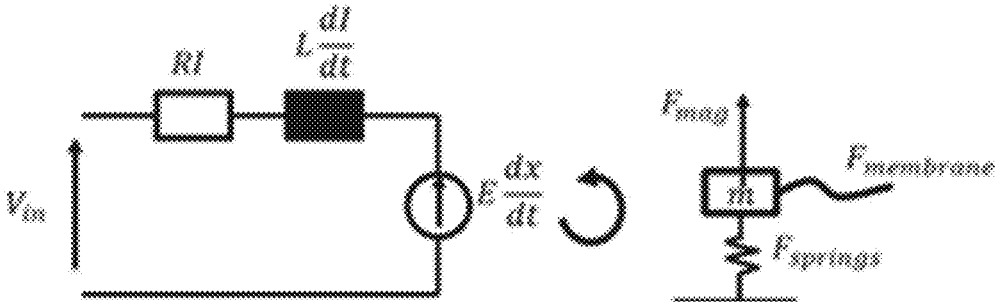
RI
$L\frac{dI}{dt}$
V_{in}
$E\frac{dx}{dt}$
F_{mag}
$F_{membrane}$
m
$F_{springs}$

FIG. 26

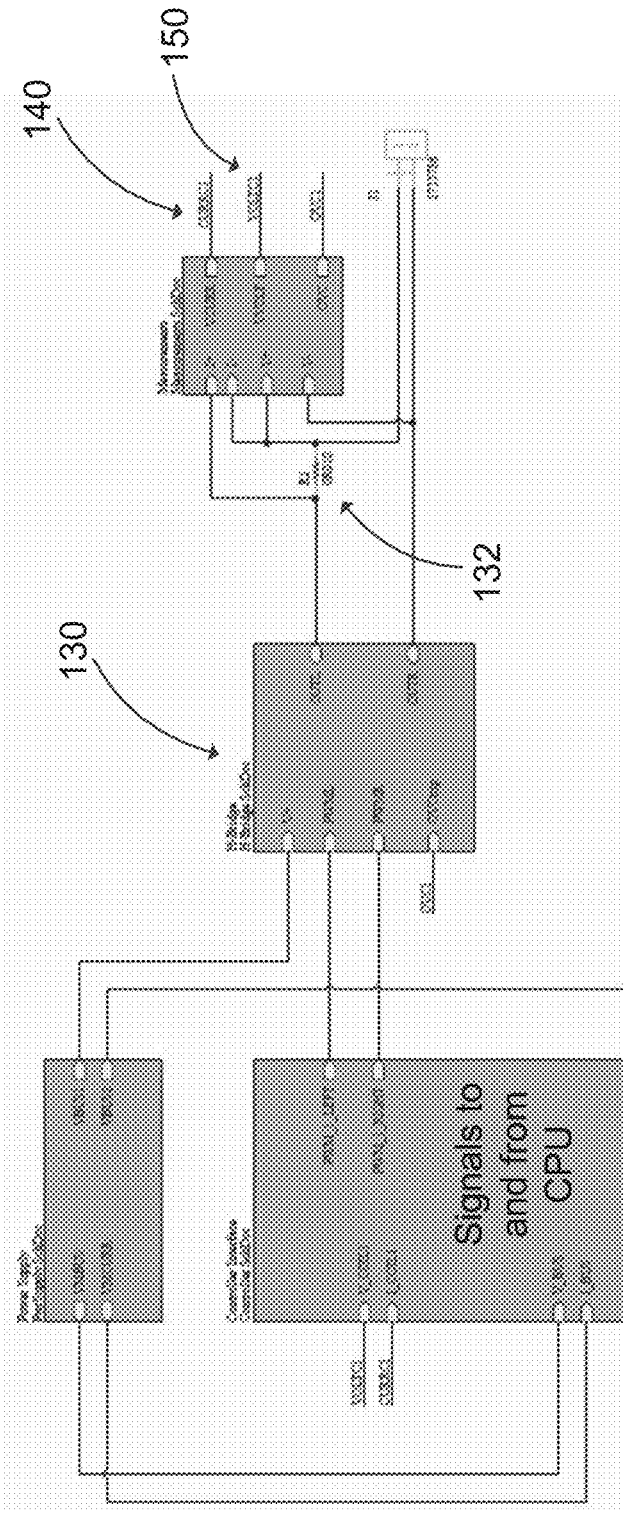

FIG. 27A

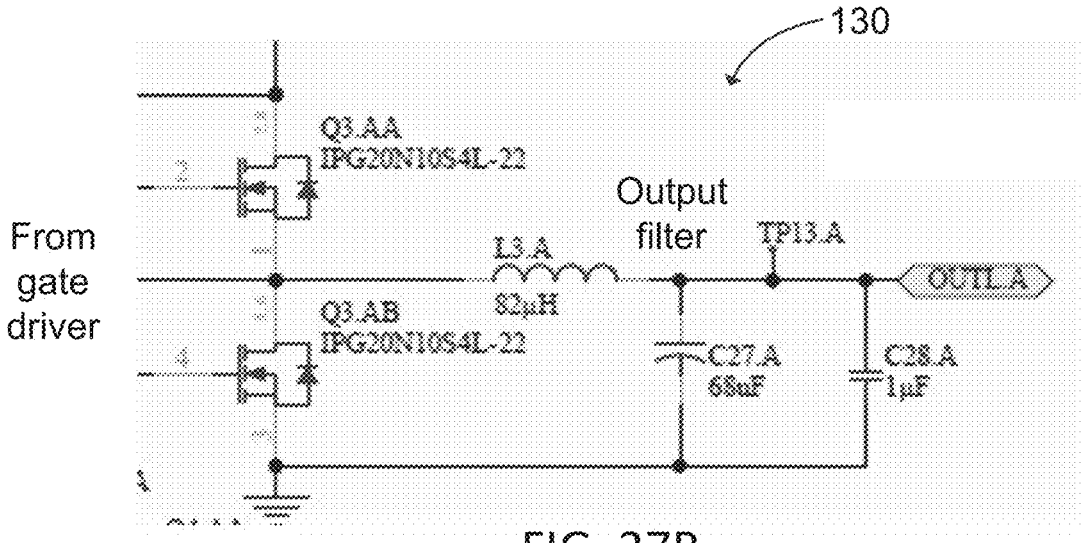

FIG. 27B

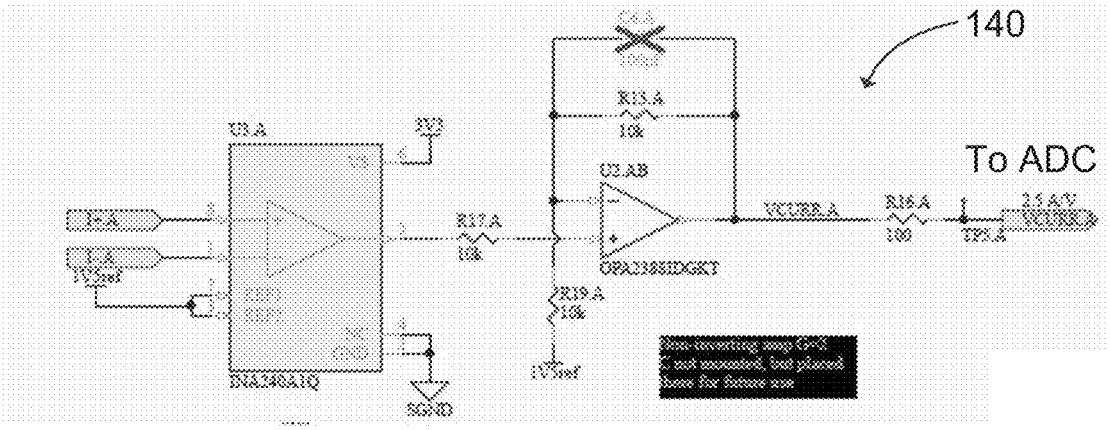

FIG. 27C

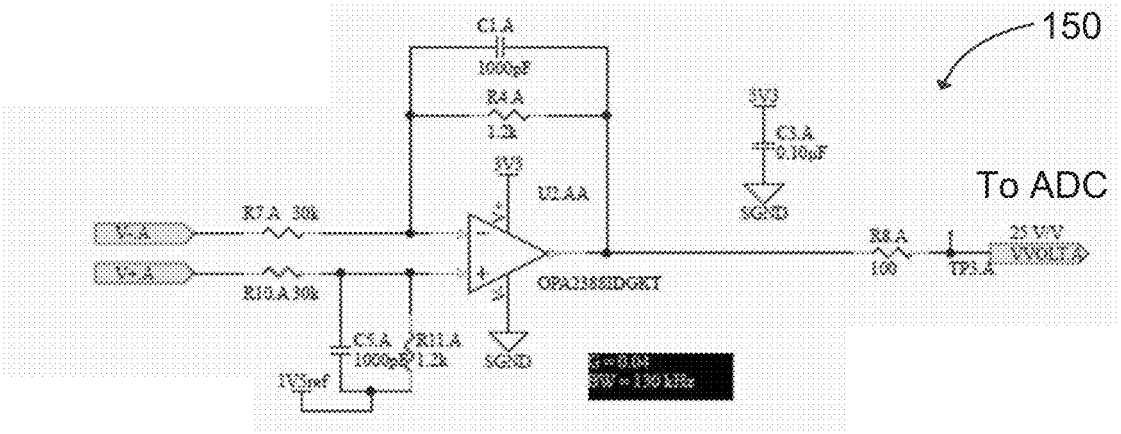

FIG. 27D

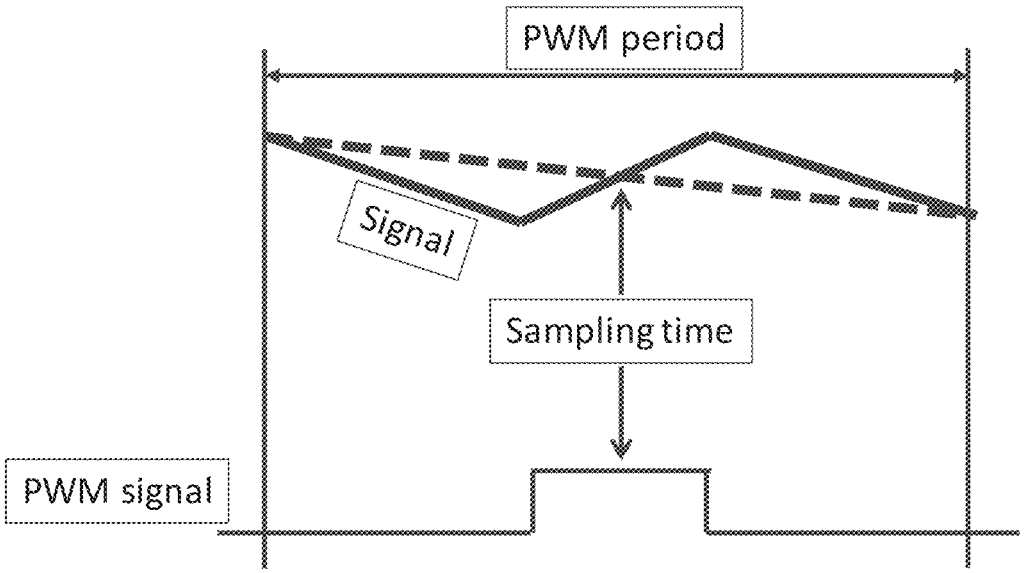

FIG. 28

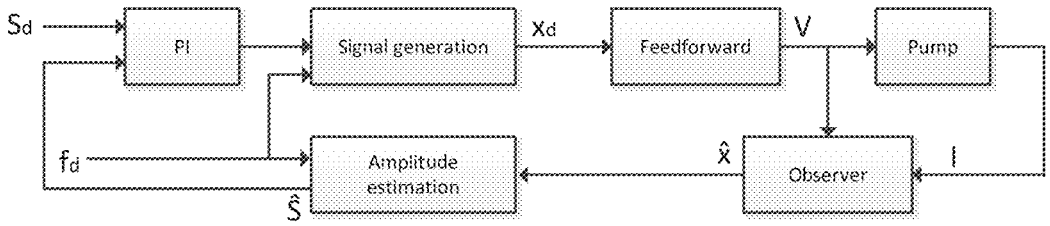

FIG. 29A

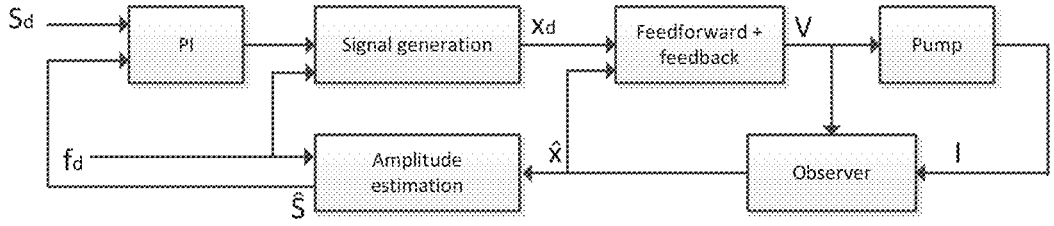

FIG. 29B

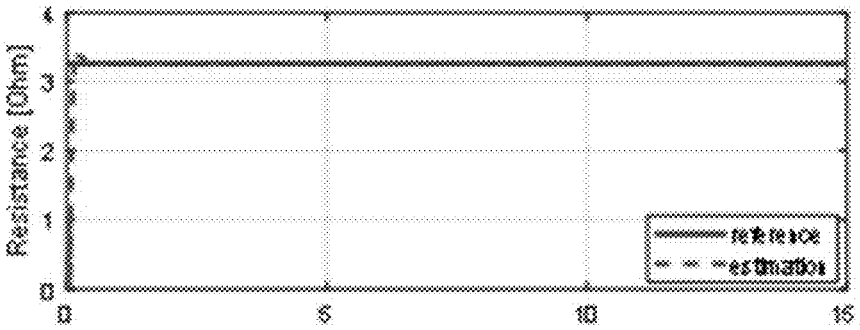

FIG. 30A

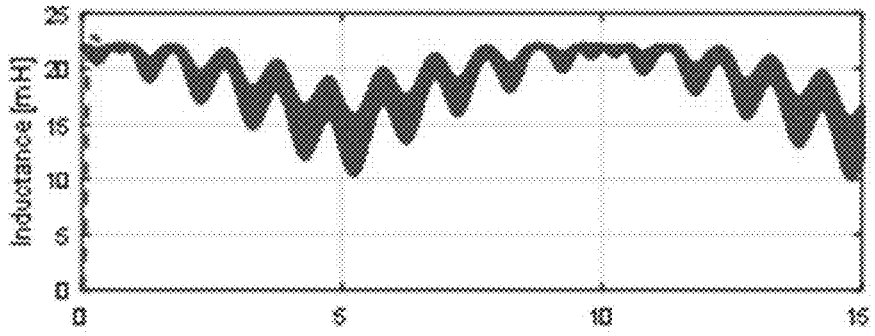

FIG. 30B

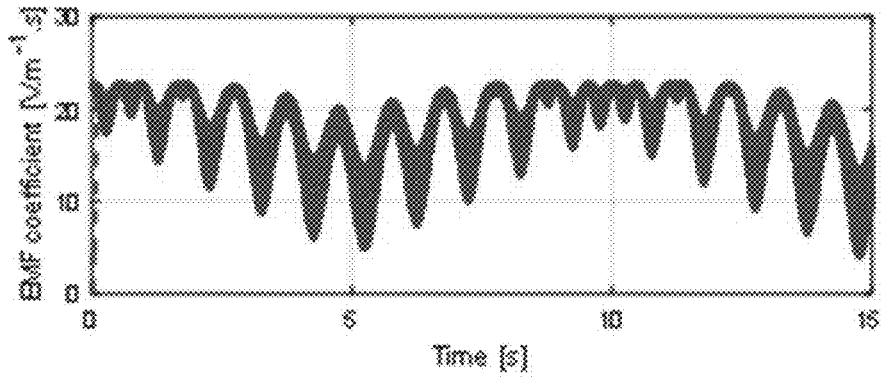

FIG. 30C

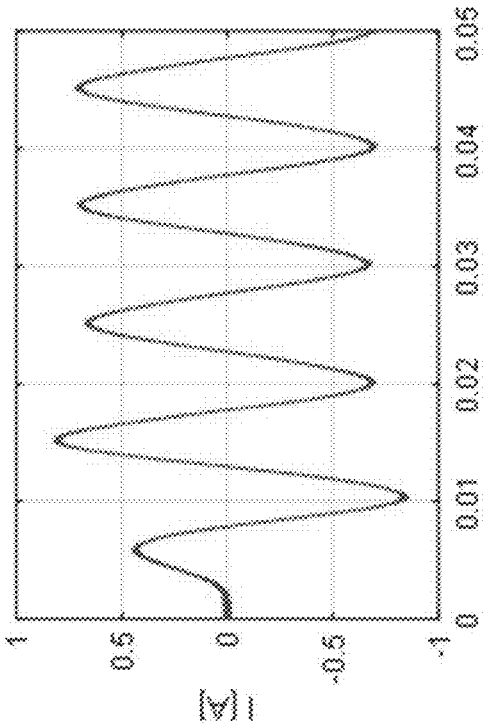

FIG. 31A

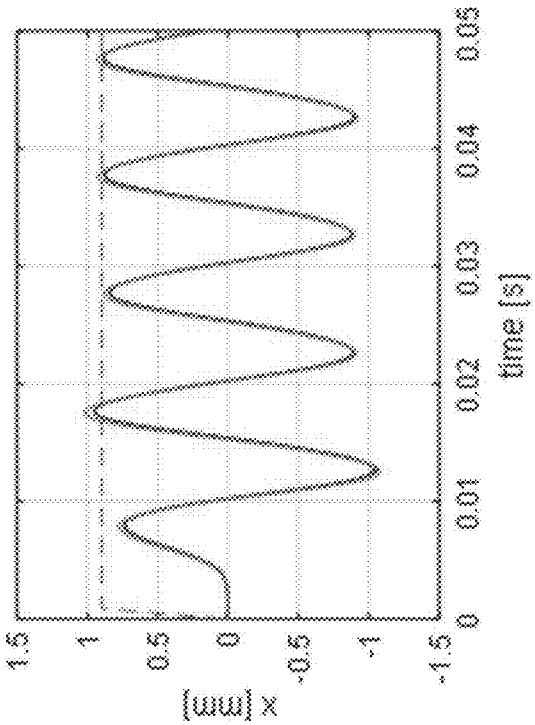

FIG. 31B

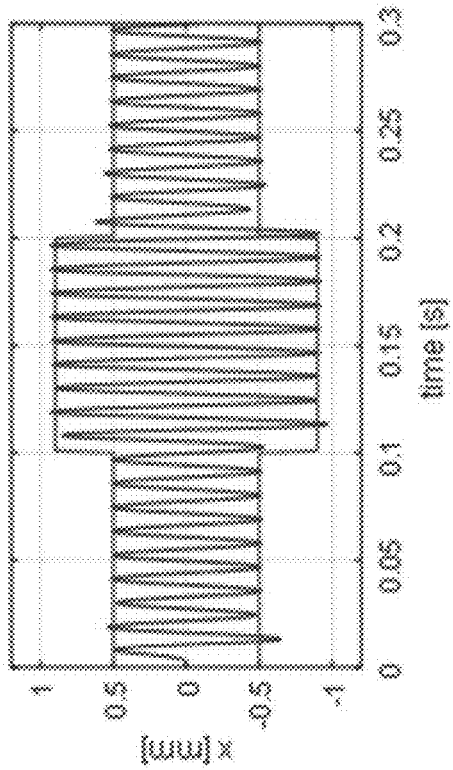

FIG. 32A

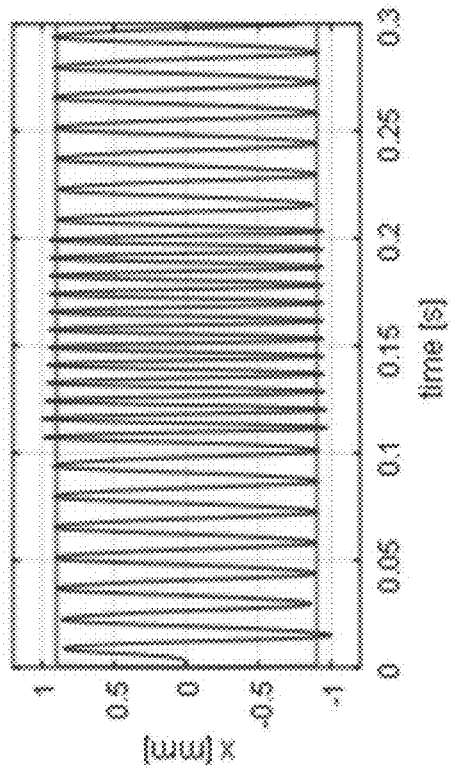

FIG. 32B

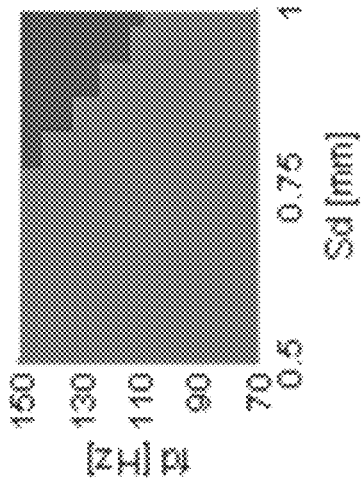

FIG. 33A

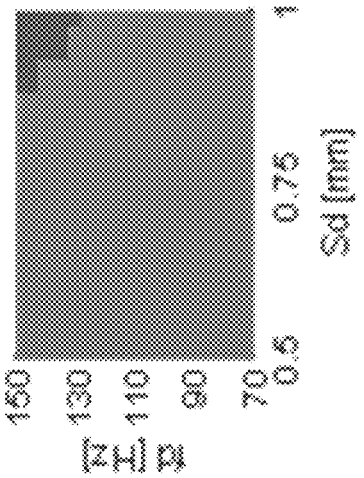

FIG. 33B

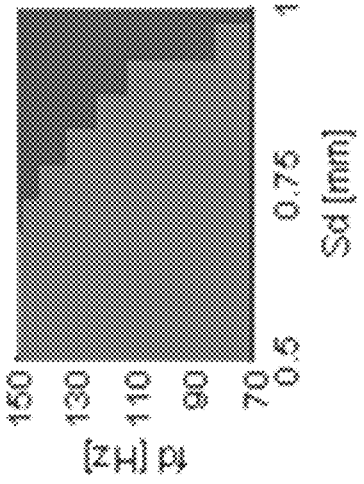

FIG. 33C

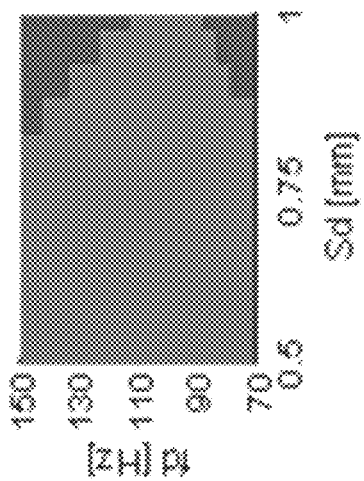

FIG. 33D

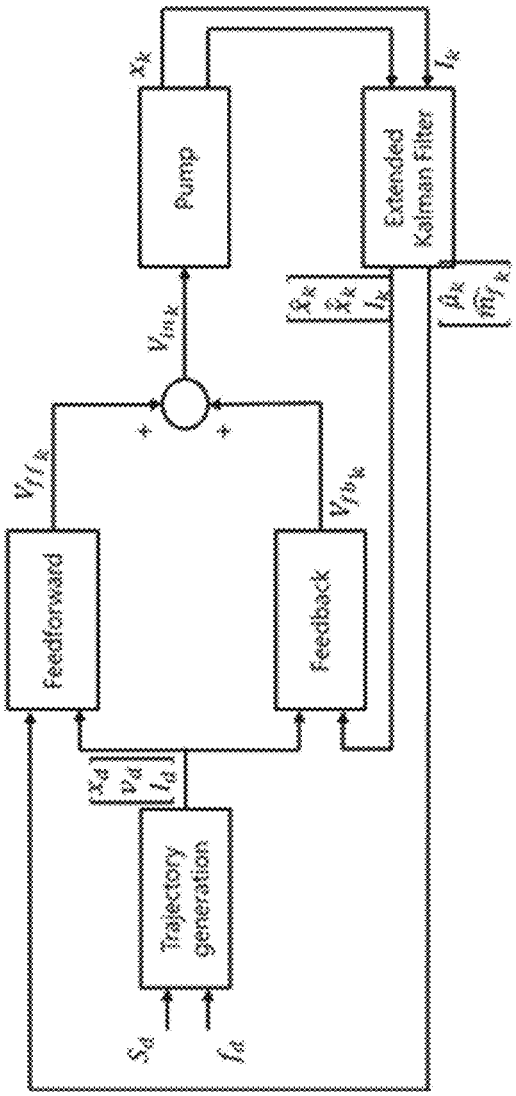
Trajectory generation
Feedforward
Feedback
Pump
Extended Kalman Filter

FIG. 34

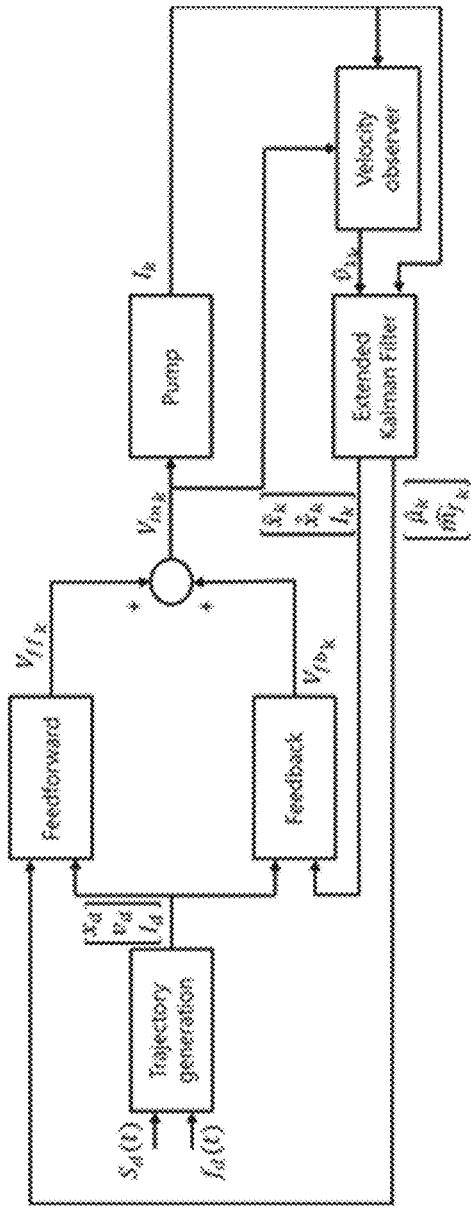
Trajectory generation
Feedforward
Feedback
Pump
Extended Kalman Filter
Velocity observer

FIG. 35

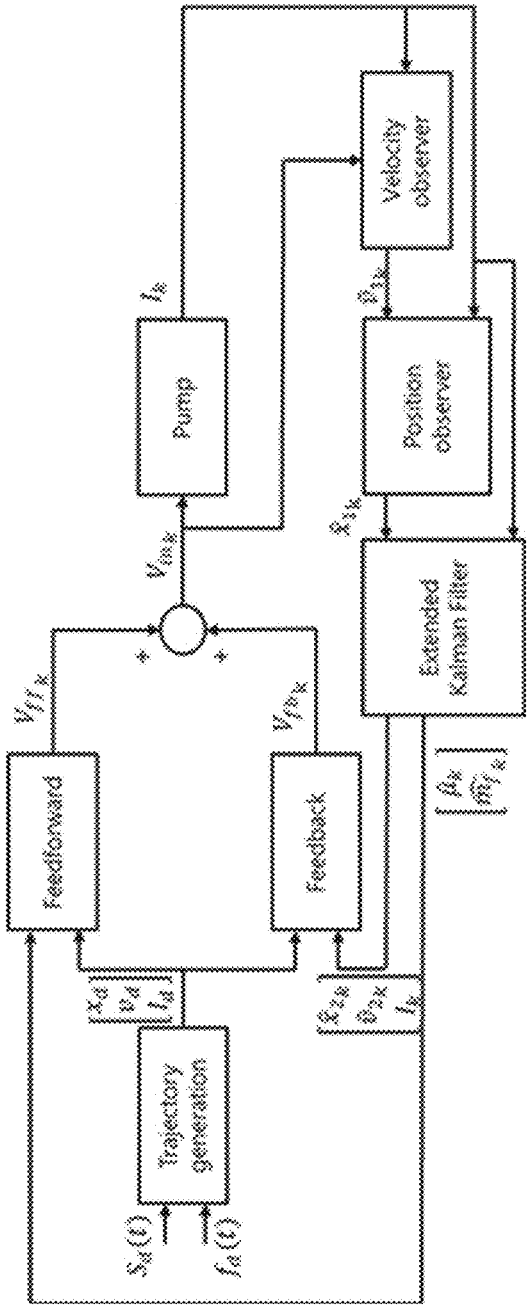
Trajectory generation
Feedforward
Feedback
Pump
Velocity observer
Position observer
Extended Kalman Filter

FIG. 36

SYSTEMS AND METHODS FOR CONTROLLING AN IMPLANTABLE BLOOD PUMP

CROSS-REFERENCE TO RELATED APPLICATIONS

This application claims the benefit of priority of U.S. Provisional Patent Application No. 62/819,436, filed Mar. 15, 2019, the entire contents of which are incorporated herein by reference.

FIELD OF THE INVENTION

The present invention relates generally to implantable heart pumps having an undulating membrane with improved hydraulic performance designed to reduce hemolysis and platelet activation and more particularly to controlling the implantable pump.

BACKGROUND

The human heart is comprised of four major chambers with two ventricles and two atria. Generally, the right-side heart receives oxygen-poor blood from the body into the right atrium and pumps it via the right ventricle to the lungs. The left-side heart receives oxygen-rich blood from the lungs into the left atrium and pumps it via the left ventricle to the aorta for distribution throughout the body. Due to any of a number of illnesses, including coronary artery disease, high blood pressure (hypertension), valvular regurgitation and calcification, damage to the heart muscle as a result of infarction or ischemia, myocarditis, congenital heart defects, abnormal heart rhythms or various infectious diseases, the left ventricle may be rendered less effective and thus unable to pump oxygenated blood throughout the body.

The Centers for Disease Control and Prevention (CDC) estimate that about 5.1 million people in the United States suffer from some form of heart failure. Heart failure is generally categorized into four different stages with the most severe being end stage heart failure. End stage heart failure may be diagnosed where a patient has heart failure symptoms at rest in spite of medical treatment. Patients at this stage may have systolic heart failure, characterized by decreasing ejection fraction. In patients with systolic heart failure, the walls of the ventricle, which are typically thick in a healthy patient, become thin and weak. Consequently, during systole a reduced volume of oxygenated blood is ejected into circulation, a situation that continues in a downward spiral until death. A patient diagnosed with end stage heart failure has a one-year mortality rate of approximately 50%.

For patients that have reached end stage heart failure, treatment options are limited. In addition to continued use of drug therapy commonly prescribed during earlier stages of heart failure, the typical recommend is cardiac transplantation and implantation of a mechanical assist device. While a cardiac transplant may significantly prolong the patient's life beyond the one year mortality rate, patients frequently expire while on a waitlist for months and sometimes years awaiting a suitable donor heart. Presently, the only alternative to a cardiac transplant is a mechanical implant. While in recent years mechanical implants have improved in design, typically such implants will prolong a patient's life by a few years at most, and include a number of co-morbidities.

One type of mechanical implant often used for patients with end stage heart failure is a left ventricular assist device

(LVAD). The LVAD is a surgically implanted pump that draws oxygenated blood from the left ventricle and pumps it directly to the aorta, thereby off-loading (reducing) the pumping work of the left ventricle. LVADs typically are used either as "bridge-to-transplant therapy" or "destination therapy." When used for bridge-to-transplant therapy, the LVAD is used to prolong the life of a patient who is waiting for a heart transplant. When a patient is not suitable for a heart transplant, the LVAD may be used as a destination therapy to prolong the life, or improve the quality of life, of the patient, but generally such prolongation is for only a couple years.

Generally, a LVAD includes an inlet cannula, a pump, and an outlet cannula, and is coupled to an extracorporeal battery and control unit. The inlet cannula typically directly connected to the left ventricle, e.g., at the apex, and delivers blood from the left ventricle to the pump. The outlet cannula typically connected to the aorta distal to the aortic valve, delivers blood from the pump to the aorta. Typically, the outlet cannula of the pump is extended using a hose-type structure, such as a Dacron graft, to reach a proper delivery location on the aorta. Early LVAD designs were of the reciprocating type but more recently rotary and centrifugal pumps have been used.

U.S. Pat. No. 4,277,706 to Isaacson, entitled "Actuator for Heart Pump," describes a LVAD having a reciprocating pump. The pump described in the Isaacson patent includes a housing having an inlet and an outlet, a cavity in the interior of the pump connected to the inlet and the outlet, a flexible diaphragm that extends across the cavity, a plate secured to the diaphragm, and a ball screw that is configured to be reciprocated to drive the plate and connected diaphragm from one end of the cavity to the other end to simulate systole and diastole. The ball screw is actuated by a direct current motor. The Isaacson patent also describes a controller configured to manage the revolutions of the ball screw to control the starting, stopping and reversal of directions to control blood flow in and out of the pump.

Previously-known reciprocating pump LVADs have a number of drawbacks. Such pumps often are bulky, heavy and may require removal of bones and tissue in the chest for implantation. They also require a significant amount of energy to displace the blood by compressing the cavity. Moreover, the pump subjects the blood to significant pressure fluctuations as it passes through the pump, resulting in high shear forces and risk of hemolysis. These pressure fluctuations may be exaggerated at higher blood flow rates. Further, depending on the geometry of the pump, areas of little or no flow may result in flow stagnation, which can lead to thrombus formation and potentially fatal medical conditions, such as stroke. Finally, the positive displacement pumps like the one described in the Isaacson patent are incapable of achieving pulsatility similar to that of the natural heart, e.g., roughly 60 to 100 beats per minute, while maintaining physiological pressure gradients.

LVADs utilizing rotary and centrifugal configurations also are known. For example, U.S. Pat. No. 3,608,088 to Reich, entitled "Implantable Blood Pump," describes a centrifugal pump to assist a failing heart. The Reich patent describes a centrifugal pump having an inlet connected to a rigid cannula that is coupled to the left ventricular cavity and a Dacron graft extending from the pump diffuser to the aorta. A pump includes an impeller that is rotated at high speeds to accelerate blood, and simulated pulsations of the natural heart by changing rotation speeds or introducing a fluid oscillator.

U.S. Pat. No. 5,370,509 to Golding, entitled "Sealless Rotodynamic Pump with Fluid Bearing," describes an axial blood pump capable for use as a heart pump. One embodiment described involves an axial flow blood pump with impeller blades that are aligned with the axes of the blood inlet and blood outlet. U.S. Pat. No. 5,588,812 to Taylor, entitled "Implantable Electrical Axial-Flow Blood Pump," describes an axial flow blood pump similar to that of the Golding patent. The pump described in the Taylor patent has a pump housing that defines a cylindrical blood conduit through which blood is pumped from the inlet to the outlet, and rotor blades that rotate along the axis of the pump to accelerate blood flowing through the blood conduit.

While previously-known LVAD devices have improved, those pump designs are not without problems. Like reciprocating pumps, rotary and centrifugal pumps are often bulky and difficult to implant. Rotary pumps, while mechanically different from positive displacement pumps, also exhibit undesirable characteristics. Like positive displacement pumps, rotary pumps apply significant shear forces to the blood, thereby posing a risk of hemolysis and platelet activation. The very nature of a disk or blade rotating about an axis results in areas of high velocity and low velocity as well as vibration and heat generation. Specifically, the area near the edge of the disk or blade furthest from the axis of rotation experiences higher angular velocity and thus flow rate than the area closest to the axis of rotation. The resulting radial velocity profile along the rotating blade results in high shear forces being applied to the blood. In addition, stagnation or low flow rates near the axis of rotation may result in thrombus formation.

While centrifugal pumps may be capable generating pulsatile flow by varying the speed of rotation of the associated disk or blades, this only exacerbates the problems resulting from steep radial velocity profiles and high shear force. In common practice, the output of currently available rotary pumps, measured as flow rate against a given head pressure, is controlled by changing the rotational speed of the pump. Given the mass of the rotating member, the angular velocity of the rotating member, and the resulting inertia, a change in rotational speed cannot be instantaneous but instead must be gradual. Accordingly, while centrifugal pumps can mimic a pulsatile flow with gradual speed changes, the resulting pulse is not "on-demand" and does not resemble a typical physiological pulse.

Moreover, rotary pumps typically result in the application of non-physiologic pressures on the blood. Such high operating pressures have the unwanted effect of overextending blood vessels, which in the presence of continuous flow can cause the blood vessels to fibrose and become inelastic. This in turn can lead to loss of resilience in the circulatory system, promoting calcification and plaque formation. Further, if the rotational speed of a pump is varied to simulate pulsatile flow or increase flow rate, the rotary pump is less likely to be operated at its optimal operating point, reducing efficiency and increasing energy losses and heat generation.

LVADs may also be configured to increase blood flow to match the demand of the patient. Numerous publications and patents describe methods for adjusting LVAD pump flow to match that demanded by the patient. For example, U.S. Pat. No. 7,520,850 to Brockway, entitled "Feedback control and ventricular assist devices," describes systems and methods for employing pressure feedback to control a ventricular assist device. The system described in the Brockway patent attempts to maintain a constant filling of the ventricle by measuring ventricular pressure and/or ventricular volume. While such systems can achieve flow rates as high as 8 or 9 liters per minute, these flow rates generally are outside of the efficient range of operation for current rotary pumps, which are typically tuned to operate in a range of 4 to 6 liters per minute. Thus, increasing the flow rate in rotary pumps to match patient demanded results in non-optimal pump performance.

Pumps other than of the rotary and positive displacement types are known in the art for displacing fluid. For example, U.S. Pat. Nos. 6,361,284 and 6,659,740, both to Drevet, entitled "Vibrating Membrane Fluid Circulator," describe pumps in which a deformable membrane is vibrated to propel fluid through a pump housing. In these patents, vibratory motion applied to the deformable membrane causes wave-like undulations in the membrane that propel the fluid along a channel. Different flow rates may be achieved by controlling the excitation applied to the membrane.

U.S. Pat. No. 7,323,961 to Drevet, entitled "Electromagnetic Machine with a Deformable Membrane," describes a device in which a membrane is coupled in tension along its outer edge to an electromagnetic device arranged to rotate around the membrane. As the electromagnetic device rotates, the outer edge of the membrane is deflected slightly in a direction normal to the plane of the membrane. These deflections induce a wave-like undulation in the membrane that may be used to move a fluid in contact with the membrane.

U.S. Pat. No. 9,080,564 to Drevet, entitled "Diaphragm Circulator," describes a tensioned deformable membrane in which undulations are created by electromechanically moving a magnetized ring, attached to an outer edge of a deformable membrane, over a coil. Axial displacement of magnetized ring causes undulations of membrane. Like in the '961 patent, the membrane undulations can be controlled by manipulating the magnetic attraction. U.S. Pat. No. 8,714,944 to Drevet, entitled "Diaphragm pump with a Crinkle Diaphragm of Improved Efficiency" and U.S. Pat. No. 8,834,136 to Drevet, entitled "Crinkle Diaphragm Pump" teach similar types of vibrating membrane pumps.

None of the foregoing patents to Drevet describe a vibratory membrane pump suitable for use in a biological setting, or capable of pumping blood over extended periods that present a low risk of flow stagnation leading to thrombus formation.

U.S. Patent Publication Nos. 2017/0290966 and 2017/0290967 to Botterbusch, the entire contents of each of which are incorporated herein by reference, describe implantable cardiovascular blood pumps having a flexible membrane coupled to an electromagnetic actuator assembly that causes wavelike undulations to propagate along the flexible membrane to propel blood through the pump while avoiding thrombus formation, hemolysis and/or platelet activation. The Botterbusch pumps generate hydraulic power—flow and pressure—by translating the linear motion of the electromagnetic actuator, to the flexible membrane, which deforms through its interaction with the blood, translating energy to the blood. The flexible membrane is oriented at a 90° angle to the motion of the linear actuator such that the outer edge of the membrane is the first element to engage the blood. As a result, there is a risk of energy loss at the inlet to the membrane, which affects the hydraulic power generation by the pump.

What is needed is an energy efficient implantable pump having light weight, small size, and fast start and stop response that can operate efficiently and with improved hydraulic performance and minimal blood damage over a wide range of flow rates.

The design of such an energy efficient implantable pump that fulfils all the requirements mentioned above poses many challenges in terms of mechanical design and manufacturing process. It is also a challenge from a control perspective because unlike rotary pumps, the operation point of a vibrating membrane pump is set by the frequency and amplitude of membrane excitation. Indeed, the higher the frequency or the stroke of the undulation is, the higher the pressure head of the implantable pump will be. The stroke needs to be set accurately with sufficient speed to be able to switch the operating point of the pump fast enough to recreate a sufficient pulse that is synchronized to heartbeats. At the same time, the stroke must be restrained so as not to damage the membrane, blood, or the internal spring components of the pump by excessive stress. This phenomenon can be caused by overpowering the actuator or by the effect of perturbation forces induced by the remaining activity of the left ventricle. Due to the specific medium (blood) in which the pump is operating, it may be preferred to avoid adding position, velocity, or acceleration sensors that would significantly increase the complexity and size of a pump that is already difficult to design.

Attempts to bypass the use of motion sensors include those that measure current ripple generated by a pulse-width modulation (PWM) voltage input to estimate an equivalent circuit inductance that is related to the magnet position. (See, e.g., M. F. Rahman, et al., Position estimation in solenoid actuators, *IEEE Transactions on Industry Applications*, vol. 32, n. 3, p. 552-559, June 1996). This method only works if the magnetic parts' velocity is close to zero which is not the case of vibrating membrane pump that operates at frequencies close to 100 Hz. Others methods compute the back electromotive force (back EMF proportional to velocity) from an inverted equivalent electric circuit and directly integrate the estimated speed to get the position. (See, e.g., J. Zhang, et al., Study on Self-Sensor of Linear Moving Magnet Compressor's Piston Stroke, *IEEE Sensors Journal*, vol. 9, n. 2, p. 154-158, February 2009). This last method only requires knowledge of electrical parameters, and no information about the mechanical subsystem of the actuator are needed. However, coil current derivative must be computed which is not trivial in a noisy environment.

For example, one method presented a velocity observer to estimate the back EMF that does not rely on computing any time. (See., e.g., J. Latham, et al., Parameter Estimation and a Series of Nonlinear Observers for the System Dynamics of a Linear Vapor Compressor, *IEEE Transactions on Industrial Electronics*, vol. 63, no 11, p. 6736-6744, November 2016). The resulting position from integrating the estimated velocity is sensitive to measurement bias that propagates into the velocity estimation which results in drift when integrated. This effect can be bounded by adding another stage to the observer. (See, e.g., P. Mercorelli, A Motion-Sensorless Control for Intake Valves in Combustion Engines, *IEEE Transactions on Industrial Electronics*, vol. 64, n 4, p. 3402-3412, April 2017). This additional stage adds partial knowledge about the mechanical subsystem of the actuator, and is robust to unknown, bounded forces. However, these studies are limited to a linear domain of the actuator, where the parameters of the equivalent electric circuit of the actuator can be approximated as constants, which is not valid for vibrating membrane pumps where the actuator is made as small as possible.

In view of the foregoing, there exists a need for controlling an energy efficient implantable pump that has light weight, small size, and fast start and stop response, for example, without relying on position, velocity, or acceleration sensors.

It would further be desireable to provide an improved controller for controlling an energy efficient implantable pump relying on position measurement.

SUMMARY OF THE INVENTION

The present invention overcomes the drawbacks of previously-known LVAD systems and methods by providing an implantable pump system having an undulating membrane capable of producing a wide range of physiological flow rates while applying low shear forces to the blood, thereby reducing hemolysis and platelet activation relative to previously-known systems.

In accordance with one aspect of the invention, the implantable blood pump system includes an implantable blood pump configured to be implanted at a patient's heart, and a controller operatively coupled to the implantable blood pump. The implantable blood pump includes a housing having an inlet and an outlet, a deformable membrane disposed within the housing, and an actuator having a stationary component and a moving component coupled to the deformable membrane. The actuator is powered by an alternating current that causes the moving component to reciprocate at a predetermined frequency and amplitude relative to the stationary component, thereby causing the deformable membrane to produce a predetermined blood flow from the inlet out through the outlet.

In addition, the controller is programmed to operate the actuator to cause the moving component to reciprocate at the predetermined frequency and amplitude relative to the stationary component, receive a signal indicative of the alternating current via a current sensor operatively coupled to the controller, determine a position of the moving component based on the signal indicative of the alternating current, and adjust operation of the actuator to cause the moving component to reciprocate at an adjusted predetermined frequency and amplitude relative to the stationary component based on the position of the moving component, thereby causing the deformable membrane to produce an adjusted predetermined blood flow from the inlet out through the outlet. For example, the adjusted predetermined blood flow may be a pulse synchronized with the patient's heartbeat.

The controller may be programmed to determine the position of the moving component by estimating a velocity of the moving component based on the signal indicative of the alternating current. For example, the controller may be programmed to estimate the velocity of the moving component based on co-energy W values of a finite elements model (FEM) of various positions and alternating currents of the moving component. In addition, the controller may be programmed to determine the position of the moving component by determining the velocity of the moving component based on the estimated velocity of the moving component.

Further, the controller may be programmed to adjust operation of the actuator to cause the moving component to reciprocate at the adjusted predetermined frequency and amplitude relative to the stationary component while limiting overshoot. For example, the controller may include a proportional integral (PI) controller programmed to limit overshoot by canceling errors due to un-modeled dynamics of the implantable blood pump. The controller may be programmed to determine the position of the moving com-

ponent based on the signal indicative of the alternating current and variations of inductance and back EMF coefficient.

In accordance with one aspect of the present invention, the stationary component includes an electromagnetic assembly that generates a magnetic field. Moreover, the moving component may include a magnetic ring concentrically suspended around the electromagnetic assembly and designed to reciprocate responsive to the magnetic field at the predetermined frequency and amplitude over the electromagnetic assembly. The electromagnetic assembly may include first and second electromagnetic coils, such that the magnetic ring is caused to move when at least one of the first or second electromagnetic coils is powered by the alternating current. In addition, the magnetic ring induces wave-like deformations in the deformable membrane by reciprocating over the electromagnetic assembly.

In addition, the implantable blood pump may include first and second suspension rings concentrically disposed around and coupled to the stationary component and the moving component. Accordingly, the moving component may be coupled to each of the deformable membrane and the first and second suspension rings via a plurality of posts, such that the first and second suspension rings permit the moving component to reciprocate relative to the stationary component. The first and second suspension rings may exert a spring force on the moving component when the moving component reciprocates relative to the stationary component.

Additionally, the implantable blood pump further may include a rigid ring coupled to the moving component and to the deformable membrane. Moreover, a bottom surface of the actuator and an interior portion of the housing adjacent the outlet may form a flow channel within which the deformable membrane is suspended. Accordingly, the deformable membrane may have a central aperture adjacent the outlet. In addition, the actuator and an interior surface of the housing adjacent the inlet may form a delivery channel extending from the inlet to the flow channel. The implantable blood pump system further may include a rechargeable battery for delivering the alternating current to power the implantable blood pump.

In accordance with another aspect of the present invention, an alternative exemplary implantable blood pump system is provided. The system may include the implantable blood pump sized and shaped to be implanted at a patient's heart described above, and a controller operatively coupled to the implantable blood pump. For example, the controller may be programmed to: operate the actuator to cause the moving component to reciprocate at the predetermined frequency and amplitude relative to the stationary component; receive a signal indicative of an intensity of a magnetic field of a magnet coupled to the moving component via a sensor, e.g., a hall effector sensor, operatively coupled to the controller, the sensor stationary relative to the stationary component; determine a position of the moving component based on the signal indicative of the intensity of the magnetic field; and adjust operation of the actuator to cause the moving component to reciprocate at an adjusted predetermined frequency and amplitude relative to the stationary component based on the position of the moving component, thereby causing the deformable membrane to produce an adjusted predetermined blood flow from the inlet out through the outlet.

For example, the sensor may be coupled to the stationary component or the housing. The controller further may be programmed to estimate blood flow from the inlet out through the outlet based on the position of the moving component. Additionally, the controller further may be programmed to detect a fault by comparing an average residual value based on the position of the moving component with a predetermined threshold value.

In accordance with another aspect of the present invention, the controller may be programmed to: operate the actuator to cause the moving component to reciprocate at the predetermined frequency and amplitude relative to the stationary component; receive a signal indicative of an intensity of a magnetic field of a magnet coupled to the moving component via a sensor operatively coupled to the controller, the sensor stationary relative to the stationary component; estimate a velocity of the moving component based on the signal indicative of the intensity of the magnetic field; and adjust operation of the actuator to cause the moving component to reciprocate at an adjusted predetermined frequency and amplitude relative to the stationary component based on the velocity of the moving component, thereby causing the deformable membrane to produce an adjusted predetermined blood flow from the inlet out through the outlet.

BRIEF DESCRIPTION OF THE DRAWINGS

FIG. **1** depicts an exemplary embodiment of the pump system of the present invention comprising an implantable pump, controller, battery, programmer and mobile device.

FIG. **2** is a perspective view of the implantable pump of FIG. **1**.

FIGS. **3**A and **3**B are, respectively, a perspective view and a schematic view of the electronic components of an exemplary embodiment of the controller of the present invention.

FIG. **4** is a plan view of an extracorporeal battery for use in the pump system of the present invention.

FIGS. **5**A and **5**B are, respectively, a perspective view and a schematic view of the electronic components of an exemplary embodiment of the programmer of the present invention.

FIG. **6** is a perspective view of the pump assembly of the present invention.

FIG. **7** is a perspective, cut-away view of the implantable pump of the present invention.

FIG. **8** is an exploded view of the implantable pump of the present invention.

FIG. **9** is a perspective cross-sectional view of the pump assembly of the present invention.

FIG. **10** is a perspective cross-sectional view of the membrane assembly of the present invention.

FIG. **11** is a perspective cross-sectional view of the moving components of the pump assembly according to a first embodiment of the present invention.

FIG. **12** is a cross-sectional view of the implantable pump of the present invention.

FIG. **13** is a cross-sectional view of a lower portion of the implantable pump depicting the flow channel and membrane assembly in a resting position.

FIG. **14** is a cross-sectional view of a lower portion of the implantable pump depicting the flow channel and membrane assembly with the membrane undulating.

FIG. **15**A is a cross-sectional view of an alternative exemplary embodiment of an implantable pump of the present invention with improved hydraulic performance for use in the pump system of FIG. **1**.

FIG. **15**B is a perspective view of the implantable pump of FIG. **15**A.

FIG. **16**A illustrates blood flow across a planar ring membrane support, whereas FIG. **16**B illustrates blood flow using a pump assembly with a skirt in accordance with one aspect of the present invention.

FIG. **17** shows graphs illustrating the relationship between max hydraulic power and the height of the skirt.

FIG. **18** is a cross-sectional view of yet another alternative exemplary embodiment of an implantable pump of the present invention with improved hydraulic performance, wherein the outflow cannula is disposed coaxially within the inflow cannula.

FIG. **19** is a cross-sectional view of yet another alternative exemplary embodiment of an implantable pump of the present invention having a ring and skirt with improved hydraulic performance for use in the pump system of FIG. **1**.

FIG. **20** is a cross-sectional view of yet another alternative exemplary embodiment of an implantable pump of the present invention having a ring, skirt, and expandable portion with improved hydraulic performance for use in the pump system of FIG. **1**.

FIGS. **21**A-H illustrates various configurations for coupling a battery to a controller of the present invention, and FIG. **2**H illustrates a controller coupled to a power supply.

FIG. **22** is a flow chart illustrating steps of an exemplary method for controlling an implantable pump constructed in accordance with the principles of the present invention.

FIG. **23** is a FEM model of a subset of an actuator assembly of an implantable pump constructed in accordance with the principles of the present invention.

FIG. **24**A displays co-energy as a function of magnetic ring position and coil current, FIG. **24**B displays force as a function of magnetic ring position and coil current, FIG. **24**C displays circuit inductance of an equivalent circuit as a function of magnetic ring position and coil current, and FIG. **24**D displays circuit EMF coefficient of an equivalent circuit as a function of magnetic ring position and coil current.

FIG. **25** is a graph illustrating spring reaction force of as a function of position of an implantable pump.

FIG. **26** is a schematic of the parameters of an equivalent circuit in accordance with the principles of the present invention.

FIGS. **27**A-**27**D are schematics of the power electronics constructed in accordance with the principles of the present invention.

FIG. **28** illustrates ADC sampling for measuring current in accordance with the principles of the present invention.

FIG. **29**A is a diagram illustrating multistage control of a controller constructed in accordance with the principles of the present invention, and FIG. **29**B is a diagram illustrating an alternative multistage control of a controller constructed in accordance with the principles of the present invention.

FIGS. **30**A-C illustrate identification of variations of resistance, inductance, and EMF coefficient, respectively, with magnetic ring position and coil current in accordance with the principles of the present invention.

FIGS. **31**A and **31**B illustrate the system response to a desired stroke with respect to coil current and magnetic ring position, respectively.

FIGS. **32**A and **32**B illustrate the system response to change of operation points with respect to amplitude and frequency, respectively.

FIGS. **33**A-D illustrate stroke output error maps of the system in accordance with the principles of the present invention.

FIG. **34** is a diagram illustrating multistage control of a controller relying on position measurement constructed in accordance with the principles of the present invention.

FIG. **35** is a diagram illustrating an alternative multistage sensorless control of a controller constructed in accordance with the principles of the present invention.

FIG. **36** is a diagram illustrating yet another alternative multistage sensorless control of a controller constructed in accordance with the principles of the present invention.

DETAILED DESCRIPTION

The implantable pump system of the present invention is particularly well-suited for use as a left ventricular assist device (LVAD), and includes an undulating membrane pump suitable for long-term implantation in a patient having end term heart failure. An implantable pump system constructed in accordance with the principles of the present invention includes an implantable pump and an extracorporeal battery, controller and programmer. The implantable pump includes a housing having an inlet, and outlet, a flexible membrane, and an actuator assembly. When configured as an LVAD, the housing includes an inlet cannula that is inserted into a patient's left ventricle near the apex and an outlet cannula that is surgically placed in fluid communication with the patient's aorta. By activating the actuator assembly within the implantable pump, membrane is induced to undulate, thereby causing blood to be drawn into the pump through the inlet cannula and expelled through the outlet cannula into the aorta. Flow rate and pulsatility may be manipulated by changing one or more of the frequency, amplitude and duty cycle of the actuator assembly.

For improved hydraulic performance, the implantable pump may include a skirt disposed within the housing to guide blood flow from the inlet of the pump towards the outlet. The skirt may be positioned within the housing such that blood flows across opposing sides of the skirt and towards the undulating membrane upon activation of the pump.

Referring now to FIG. **1**, pump system **10** constructed in accordance with the principles of the present invention is described. Pump system **10** includes implantable pump **20**, controller **30**, battery **40**, programmer **50** and optionally, a software module programmed to run on mobile device **60**. Implantable pump **20** is configured to be implanted within a patient's chest so that inlet cannula **21** is coupled to left ventricle LV of heart H. Outlet cannula **22** of pump **20** is configured to be coupled to aorta A. Inlet cannula **21** preferably is coupled to the apex of left ventricle LV, while outlet cannula **22** is coupled to aorta A in the vicinity of the ascending aorta, above the level of the cardiac arteries. Implantable pump **20** may be affixed within the patient's chest using a ring-suture or other conventional technique. Outlet cannula **22**, which may comprise a Dacron graft or other synthetic material, is coupled to outlet **23** of implantable pump **20**.

Referring now also to FIG. **2**, implantable pump **20** in a preferred embodiment consists of upper housing portion **24** joined to lower housing portion **25** along interface **26**, for example, by threads or welding, to form fluid tight pump housing **27** that may have a cylindrical shape. Upper housing portion **24** includes inlet cannula **21** and electrical conduit **28** for receiving electrical wires from controller **30** and battery **40**. Lower housing portion **25** includes outlet **23** that couples to outlet cannula **22**, as shown in FIG. **1**. Pump

housing **27** is made of a biocompatible material, such as stainless steel, and is sized to be implanted within a patient's chest.

Referring again to FIG. **1**, in one embodiment, controller **30** and battery **40** are extracorporeal, and are sized so as to be placed on a belt or garment worn by the patient. Both controller **30** and battery **40** are electrically coupled to implantable pump **20**, for example, via cable **29** that extends through a transcutaneous opening in the patient's skin and into electrical conduit **28** of pump housing **27**. Illustratively, battery **40** is electrically coupled to controller **30** via cable **41** that is integrated into belt **42**. In an alternative embodiment, controller **30** may be enclosed within a biocompatible housing and sized to be implanted subcutaneously in the patient's abdomen. In this alternative embodiment, controller **30** may include a wireless transceiver for bi-directional communications with an extracorporeal programming device and also include a battery that is continuously and inductively charged via extracorporeal battery **40** and an extracorporeal charging circuit. As will be understood, the foregoing alternative embodiment avoids the use of transcutaneous cable **29**, and thus eliminates a frequent source of infection for conventional LVAD devices.

Battery **40** preferably comprises a rechargeable battery capable of powering implantable pump **20** and controller **30** for a period of several days, e.g., 3-5 days, before needing to be recharged. Battery **40** may include a separate charging circuit, not shown, as is conventional for rechargeable batteries. Battery **40** preferably is disposed within a housing suitable for carrying on a belt or holster, so as not to interfere with the patient's daily activities.

Programmer **50** may consist of a conventional laptop computer that is programmed to execute programmed software routines, for use by a clinician or medical professional, for configuring and providing operational parameters to controller **30**. The configuration and operational parameter data is stored in a memory associated with controller **30** and used by the controller to control operation of implantable pump **20**. As described in further detail below, controller **30** directs implantable pump **20** to operate at specific parameters determined by programmer **50**. Programmer **50** preferably is coupled to controller **30** via cable **51** only when the operational parameters of the implantable pump are initially set or periodically adjusted, e.g., when the patient visits the clinician.

In accordance with another aspect of the invention, mobile device **60**, which may a conventional smartphone, may include an application program for bi-directionally and wirelessly communicating with controller **30**, e.g., via WiFi or Bluetooth communications. The application program on mobile device **60** may be programmed to permit the patient to send instructions to controller to modify or adjust a limited number of operational parameters of implantable pump **20** stored in controller **30**. Alternatively or in addition, mobile device **60** may be programmed to receive from controller **30** and to display on screen **61** of mobile device **60**, data relating to operation of implantable pump **20** or alert or status messages generated by controller **30**.

With respect to FIGS. **3**A and **3**B, controller **30** is described in greater detail. As depicted in FIG. **1**, controller **30** may be sized and configured to be worn on the exterior of the patient's body and may be incorporated into a garment such as a belt or a vest. Controller **30** includes input port **31**, battery port **32**, output port **33**, indicator lights **34**, display **35**, status lights **36** and buttons **37**.

Input port **31** is configured to periodically and removably accept cable **51** to establish an electrical connection between programmer **50** and controller **30**, e.g., via a USB connection. In this manner, a clinician may couple to controller **30** to set or adjust operational parameters stored in controller **30** for controlling operation of implantable pump. In addition, when programmer **50** is coupled to controller **30**, the clinician also may download from controller **30** data relating to operation of the implantable pump, such as actuation statistics, for processing and presentation on display **55** of programmer **50**. Alternatively, or in addition, controller **30** may include a wireless transceiver for wirelessly communicating such information with programmer **50**. In this alternative embodiment, wireless communications between controller **30** and programmer **50** may be encrypted with an encryption key associated with a unique identification number of the controller, such as a serial number.

Battery port **32** is configured to removably accept cable **41**, illustratively shown in FIG. **1** as integrated with belt **42**, so that cable **41** routed through the belt and extends around the patient's back until it couples to controller **30**. In this manner, battery **40** may be removed from belt **42** and disconnected from controller **30** to enable the patient to periodically replace the battery with a fully charged battery. It is expected that the patient will have available to him or her at least two batteries, so that while one battery is coupled to controller **30** to energize the controller and implantable pump, the other battery may be connected to a recharging station. Alternatively, or in addition, battery port **32** may be configured to accept a cable that is coupled directly to a power supply, such a substantially larger battery/charger combination that permits the patient to remove battery **40** while lying supine in a bed, e.g., to sleep.

Output port **33** is electrically coupled to cable **29**, which in turn is coupled to implantable pump **20** through electrical conduit **28** of pump housing **27**. Cable **29** provides both energy to energize implantable pump **20** in accordance with the configuration settings and operational parameters stored in controller **30**, and to receive data from sensors disposed in implantable pump **20**. In one embodiment, cable **29** may comprise an electrical cable having a biocompatible coating and is designed to extend transcutaneously. Cable **29** may be impregnated with pharmaceuticals to reduce the risk of infection, the transmission of potentially hazardous substances or to promote healing where it extends through the patient's skin.

As mentioned above, controller **30** may include indicator lights **34**, display **35**, status lights **36** and buttons **37**. Indicator lights **34** may visually display information relevant to operation of the system, such as the remaining life of battery **40**. Display **35** may be a digital liquid crystal display that displays real time pump performance data, physiological data of the patient, such as heart rate, or operational parameters of the implantable pump, such as the target pump pressure or flow rate, etc. When it is determined that certain parameter conditions exceed preprogrammed thresholds, an alarm may be sounded and an alert may be displayed on display **35**. Status lights **36** may comprise light emitting diodes (LEDs) that are turned on or off to indicate whether certain functionality of the controller or implantable pump is active. Buttons **37** may be used to wake up display **35**, to set or quiet alarms, etc.

With respect to FIG. **3**B, the components of the illustrative embodiment of controller **30** of FIG. **3**A are described. In addition to the components of controller **30** described in connection with FIG. **3**A, controller **30** further includes microprocessor **38**, memory **39**, battery **43**, optional transceiver **44** and amplifier circuitry **45**. Microprocessor may be a general purpose microprocessor, for which programming

to control operation of implantable pump **20** is stored in memory **39**. Memory **39** also may store configuration settings and operational parameters for implantable pump **20**. Battery **40** supplies power to controller **30** to provide continuity of operation when battery **40** is periodically swapped out. Optional transceiver **44** to facilitates wireless communication with programmer **50** and/or mobile device **60** via any of a number of well-known communications standards, including BLUETOOTH™, ZigBee, and/or any IEEE 802.11 wireless standard such as Wi-Fi or Wi-Fi Direct. Controller **30** further may include amplifier circuitry **45** for amplifying electrical signals transferred between controller **30** and implantable pump **20**.

Referring now to FIG. **4**, battery **40** is described. Battery **40** provides power to implantable pump **20** and also may provide power to controller **30**. Battery **40** may consist of a single battery or a plurality of batteries disposed within a housing, and preferably is sized and configured to be worn on the exterior of the patient's body, such as on belt **42**. Battery life indicator **46** may be provided on the exterior of battery **40** to indicate the degree to the remaining charge of the battery. Cable **41** may have one end removably coupled to battery **40** and the other end removably coupled to battery port of controller **30** to supply power to energize implantable pump **20**. In one embodiment, battery **40** may be rechargeable using a separate charging station, as is known in the art of rechargeable batteries. Alternatively, or in addition, battery **40** may include port **47** which may be removably coupled to a transformer and cable to permit the battery to be recharged using a conventional residential power outlet, e.g., 120 V, 60 Hz AC power.

Referring now to FIGS. **5A-5B**, programmer **50** is described. Programmer **50** may be conventional laptop loaded with programmed software routines for configuring controller **30** and setting operational parameters that controller **30** uses to control operation of implantable pump **20**. As discussed above, programmer **50** typically is located in a clinician's office or hospital, and is coupled to controller **30** via cable **51** or wirelessly to initially set up controller **30**, and then periodically thereafter as required to adjust the operational parameters as may be needed. The operation parameters of controller **30** set using the programmed routines of programmer **50** may include but are not limited to applied voltage, pump frequency, pump amplitude, target flow rate, pulsatility, etc. When first implanted, the surgeon or clinician may use programmer **50** to communicate initial operating parameters to controller **30**. Following implantation, the patient periodically may return to the clinician's office for adjustments to the operational parameters which may again be made using programmer **50**.

Programmer **50** may be any type of conventional personal computer device such as a laptop or a tablet computer having touch screen capability. As illustrated in FIG. **5B**, programmer **50** preferably includes processor **52**, memory **53**, input/output device **54**, display **55**, battery **56** and communication unit **57**. Memory **53** may include the operating system for the programmer, as well as the programmed routines needed to communicate with controller **30**. Communication unit **57** may include any of a number of well-known communication protocols, such as BLUETOOTH™, ZigBee, and/or any IEEE 802.11 wireless standard such as Wi-Fi or Wi-Fi Direct. As illustrated in FIG. **5A**, the programmed routines used to program and communicate with controller **30** also may provide data for display on the screen of programmer **50** identifying operational parameters with which controller **30** controls implantable pump **20**. The programmed routines also may enable programmer **50** to download from controller **30** operational data or physiologic data communicated by the implantable pump and to display that information in real time while the programmer is coupled to the controller via a wired or wireless connection. The transferred data may then be processed and displayed on the screen of programmer **50**.

Referring now to FIGS. **6** and **7**, a preferred embodiment of pump assembly **70** and implantable pump **20** are illustrated. However, it is understood that pump assemblies and implantable pumps, and components included therein, may have different shapes and sizes than those illustrated in FIGS. **6** and **7** without departing from the invention described herein. As is illustrated in FIG. **7**, pump assembly **70** is configured to fit within pump housing **27**. To fix pump assembly **70** within pump housing **27**, pump assembly **70** may include fixation ring **71**, which may extend from and around stator assembly **72**, and may be captured between upper housing portion **24** and lower housing portion **25** when the housing portions are assembled, as illustrated in FIG. **7**. In this manner, stator assembly **72** may be suspended within the pump housing in close-fitting relation to the interior walls of the pump housing. Fixation ring **71** preferably is a rigid annular structure that is disposed concentrically around stator assembly **72**, having a larger diameter than stator assembly **72**. Fixation ring **71** may be rigidly coupled to stator assembly **72** via struts **73**. Struts **73** may create gap **74** between fixation ring **71** and stator assembly **72**, which preferably is about 0.05 mm at its most restricted point.

As shown in FIG. **7**, pump assembly **70** may be disposed in pump housing **27** such that fixation ring **71** is captured on step **75** formed between upper housing portion **24** and lower housing portion **25**. In this manner, stator assembly **72** may be suspended within, and prevented from moving within, pump housing **27**. Pump housing **27** preferably is sized and configured to conform to pump assembly **70** such that, stator assembly **72** does not contact the interior of the pump housing at any location other than at fixation ring **71**.

FIG. **8** is an exploded view of implantable pump **20**, depicting the arrangement of the internal components of pump assembly **70** arranged between upper housing portion **24** and lower housing portion **25**. In particular, pump assembly **70** may comprise stator assembly **72**, magnetic ring assembly **76**, first electromagnetic coil **77**, second electromagnetic coil **78**, fixation ring **71**, first suspension ring **79**, second suspension ring **80**, posts **81** and membrane assembly **82**. Stator assembly **72** may comprise tapered section **83**, electromagnetic coil holder portions **84**, **85** and **86**, and flanged portion **87**. Magnetic ring assembly **76** may comprise magnetic ring **88** and magnetic ring holder portions **89** and **90**. First and second electromagnetic coils **77** and **78**, together with electromagnetic coil holder portions **84**, **85** and **86** may form electromagnet assembly **91**. Electromagnet assembly **91** together with stator assembly **72** form an actuator assembly. The actuator assembly together with magnetic ring assembly **76** in turn forms the actuator system of implantable pump **20**.

First electromagnetic coil **77** and second electromagnetic coil **78** may be concentrically sandwiched between electromagnetic coil holder portions **84**, **85** and **86** to form electromagnet assembly **91**. Tapered section **83**, which may be coupled to fixation ring **71** and first suspension spring **79**, may be located concentrically atop electromagnet assembly **91**. Magnetic ring **88** may be disposed with magnetic ring holder portions **89** and **90** to form magnetic ring assembly **76**, which may be concentrically disposed for reciprocation over electromagnet assembly **91**. Second suspension ring **80**

may be disposed concentrically beneath electromagnet assembly **91**. Flanged portion **87** may be concentrically disposed below second suspension ring **80**. Posts **81** may engage first suspension ring **79**, magnetic ring assembly **76** and second suspension ring **80** at equally spaced locations around the actuator assembly. Membrane assembly **82** may be positioned concentrically below flanged portion **87** and engaged with posts **81**.

Further details of pump assembly **70** are provided with respect to FIG. **9**. Specifically, actuator assembly **95** comprises stator assembly **72** and electromagnet assembly **91**, including first and second electromagnetic coils **77** and **78**. During use of implantable pump **20**, actuator assembly **95** remains stationary relative to pump housing **27**. First electromagnetic coil **77** and second electromagnetic coil **78** may be separated by electromagnetic holder portion **85**. Controller **30** and battery **40** are electrically coupled to electromagnetic coils **77** and **78** via cable **29** that extends through electrical conduit **28** of pump housing **27** to supply current to electromagnetic coils **77** and **78**. First electromagnetic coil **77** and second electromagnetic coil **78** may be in electrical communication with one another or may be configured to operate independently and have separate wired connections to controller **30** and battery **40** via cable **29**.

Electromagnetic coils **77** and **78** may be made of any electrically conductive metallic material such as copper and further may comprise of one or more smaller metallic wires wound into a coil. The wires of the electromagnetic coils are insulated to prevent shorting to adjacent conductive material. Other components of pump assembly **70**, such as stator assembly **72**, preferably also are insulated and/or made of non-conductive material to reduce unwanted transmission of the electrical signal.

Actuator assembly **95** may be surrounded by first suspension ring **79** and second suspension ring **80**. Suspension rings **79** and **80** may be annular in shape and fit concentrically around actuator assembly **95**. First suspension ring **79** preferably is rigidly affixed to tapered section **83** near a top portion of stator assembly **72** via struts **73** extending from the suspension ring to the stator assembly. As discussed above, struts **73** may also affix fixation ring **71** to stator assembly **72**. Fixation ring **71** and first suspension spring **79** may be sized and positioned such that a gap of no less than 0.5 mm exists between first suspension ring **79** and fixation ring **71**. Second suspension ring **80** similarly may be rigidly affixed via struts near the bottom of stator assembly **72**, below electromagnet assembly **91**. Suspension rings **79** and **80** preferably are sized and shaped such that when suspension rings **79** and **80** are positioned surrounding actuator assembly **95**, a gap of no less than 0.5 mm exists between actuator assembly **95** and suspension rings **79** and **80**.

First suspension ring **79** and second suspension ring **80** may comprise stainless steel having elastic properties and which exhibits a spring force when deflected in a direction normal to the plane of the spring. First suspension ring **79** and second suspension ring **80** may be substantially rigid with respect to forces applied tangential to the suspension ring. In this manner, first suspension ring **79** and second suspension ring **80** may exhibit a spring tension when deformed up and down relative to a vertical axis of the actuator assembly but may rigidly resist movement along any other axis, e.g., tilt or twist movements.

Magnetic ring assembly **76** may be annular in shape and concentrically surrounds actuator assembly **95**. Magnetic ring **88** may comprise one or more materials exhibiting magnetic properties such as iron, nickel, cobalt or various alloys. Magnetic ring **88** may be made of a single unitary component or comprise several magnetic components that are coupled together. Magnetic ring assembly **76** may be sized and shaped such that when it is positioned concentrically over actuator assembly **95**, a gap of no less than 0.5 mm exists between an outer lateral surface of actuator assembly **95** and an interior surface of magnetic ring assembly **76**.

Magnetic ring assembly **76** may be concentrically positioned around actuator assembly **95** between first suspension ring **79** and second suspension ring **80**, and may be rigidly coupled to first suspension ring **79** and second suspension ring **80**. Magnetic ring assembly **76** may be rigidly coupled to the suspension rings by more than one post **81** spaced evenly around actuator assembly **95** and configured to extend parallel to a central axis of pump assembly **70**. Suspension rings **79** and **80** and magnetic ring assembly **76** may be engaged such that magnetic ring assembly **76** is suspended equidistant between first electromagnetic coil **77** and second electromagnetic coil **78** when the suspension rings are in their non-deflected shapes. Each of suspension rings **79** and **80** and magnetic ring holder portions **89** and **90** may include post receiving regions for engaging with posts **81** or may be affixed to posts **81** in any suitable manner that causes suspension rings **79** and **80** and magnetic ring assembly **76** to be rigidly affixed to posts **81**. Posts **81** may extend beyond suspension rings **79** and **80** to engage other components, such as flanged portion **87** and membrane assembly **82**.

First electromagnetic coil **77** may be activated by controller applying an electrical signal from battery **40** to first electromagnetic coil **77**, thus inducing current in the electromagnetic coil and generating a magnetic field surrounding electromagnetic coil **77**. The direction of the current in electromagnetic coil **77** and the polarity of magnetic ring assembly **76** nearest electromagnetic coil **77** may be configured such that the first electromagnetic coil magnetically attracts or repeals magnetic ring assembly **76** as desired. Similarly, a magnetic field may be created in second electromagnetic coil **78** by introducing a current in the second electromagnetic coil. The direction of the current in second electromagnetic coil **78** and the polarity of magnetic ring assembly **76** nearest the second electromagnetic coil also may be similarly configured so that first electromagnetic coil **77** magnetically attracts or repels magnetic ring assembly **76** when an appropriate current is induced in second electromagnetic coil **78**.

Because magnetic ring assembly **76** may be rigidly affixed to posts **81**, which in turn may be rigidly affixed to first suspension ring **79** and second suspension ring **80**, the elastic properties of the suspension rings permit magnetic ring assembly **76** to move up towards first electromagnetic coil **77** or downward toward second electromagnetic coil **78**, depending upon the polarity of magnetic fields generated by the electromagnetic rings. In this manner, when magnetic ring assembly **76** experiences an upward magnetic force, magnetic ring assembly **76** deflects upward towards first electromagnetic coil **77**. As posts **81** move upward with magnetic ring assembly **76**, posts **81** cause the suspensions rings **79** and **80** to elastically deform, which creates a spring force opposite to the direction of movement. When the magnetic field generated by the first electromagnetic coil collapses, when the electrical current ceases, this downward spring force causes the magnetic ring assembly to return to its neutral position. Similarly, when magnetic ring assembly **76** is magnetically attracted downward, magnetic ring assembly **76** deflects downward towards second electromagnetic ring **78**. As posts **81** move downward with magnetic

ring assembly **76**, posts **81** impose an elastic deformation of the first and second suspension rings, thus generating a spring force in the opposite direction. When the magnetic field generated by the second electromagnetic ring collapses, when the electrical current ceases, this upward spring force causes the magnetic ring assembly to again return to its neutral position.

Electromagnetic coils **77** and **78** may be energized separately, or alternatively, may be connected in series to cause the electromagnetic coils to be activated simultaneously. In this configuration, first magnetic coil may be configured to experience a current flow direction opposite that of the second electromagnetic coil. Accordingly, when current is induced to first electromagnetic coil **77** to attract magnetic ring assembly **76**, the same current is applied to second electromagnetic coil **78** to induce a current that causes second electromagnetic coil **78** to repel magnetic ring assembly **76**. Similarly, when current is induced to second electromagnetic coil **78** to attract magnetic ring assembly **76**, the current applied to first electromagnetic coil **77** causes the first electromagnetic coil to repel magnetic ring assembly **76**. In this manner, electromagnetic coils **77** and **78** work together to cause deflection of magnetic ring assembly **76**.

By manipulating the timing and intensity of the electrical signals applied to the electromagnetic coils, the frequency at which magnetic ring assembly **76** deflects towards the first and second electromagnetic coils may be altered. For example, by alternating the current induced in the electromagnetic coils more frequently, the magnetic ring assembly may be caused to cycle up and down more times in a given period. By increasing the amount of current, the magnetic ring assembly may be deflected at a faster rate and caused to travel longer distances.

Alternatively, first electromagnetic coil **77** and second electromagnetic coil **78** may be energized independently. For example, first electromagnetic coil **77** and second electromagnetic coil **78** may be energized at varying intensities; one may be coordinated to decrease intensity as the other increases intensity. In this manner, intensity of the signal applied to second electromagnetic coil **78** to cause downward magnetic attraction may simultaneously be increased as the intensity of the signal applied to first electromagnetic coil **77** causes an upward magnetic attraction that decreases.

In accordance with one aspect of the invention, movements of magnetic ring assembly **76** may be translated to membrane assembly **82** which may be disposed concentrically below stator assembly **72**. Membrane assembly **82** preferably is rigidly attached to magnetic ring assembly **76** by posts **81**. In the embodiment depicted in FIG. **9**, posts **81** may extend beyond second suspension ring **80** and coupled to membrane assembly **82**.

Referring now to FIG. **10**, one embodiment of membrane assembly **82** is described in greater detail. Membrane assembly **82** may comprise rigid membrane ring **96** and membrane **97**. Rigid membrane ring **96** exhibits rigid properties under typical forces experienced during the full range of operation of the present invention. Post reception sites **98** may be formed into rigid membrane ring **96** to engage membrane assembly **82** with posts **81**. Alternatively, posts **81** may be attached to rigid membrane ring **96** in any other way which directly translates the motion of magnetic ring assembly **76** to rigid membrane ring **96**. Rigid membrane ring **96** may be affixed to membrane **97** and hold the membrane in tension. Membrane **97** may be molded directly onto rigid membrane ring **96** or may be affixed to rigid membrane ring **96** in any way that holds membrane **97** uniformly in tension along its circumference. Membrane **97** alternatively may include a flexible pleated structure where it attaches to rigid membrane ring **96** to increase the ability of the membrane to move where the membrane is affixed to rigid membrane ring **96**. Membrane **97** may further include circular aperture **99** disposed in the center of the membrane.

In a preferred embodiment, membrane **97** has a thin, planar shape and is made of an elastomer having elastic properties and good durability. Alternatively, membrane **97** may have a uniform thickness from the membrane ring to the circular aperture. As a yet further alternative, membrane **97** may vary in thickness and exhibit more complex geometries. For example, as shown in FIG. **10**, membrane **97** may have a reduced thickness as the membrane extends from rigid membrane ring **96** to circular aperture **99**. Alternatively, or in addition to, membrane **97** may incorporate metallic elements such as a spiral spring to enhance the spring force of the membrane in a direction normal to plane of the membrane, and this spring force may vary radially along the membrane. In yet another embodiment, membrane **97** may be pre-formed with an undulating shape.

FIG. **11** depicts moving portions of the embodiment of pump assembly **70** shown in FIGS. **6-9** as non-grayed out elements. Non-moving portions of the pump assembly, including actuator assembly **95** and electromagnet assembly **91** (partially shown) may be fixed to pump housing **27** by fixation ring **71**. Moving portions of pump assembly **70** may include posts **81**, first suspension spring **79**, magnetic ring assembly **76**, second suspension spring **80** and membrane assembly **82**. As magnetic ring assembly **76** moves up and down, the movement is rigidly translated by posts **81** to membrane assembly **82**. Given the rigidity of the posts, when magnetic ring assembly **76** travels a certain distance upward or downward, membrane assembly **82** may travel the same distance. For example, when magnetic ring assembly **76** travels 2 mm from a position near first electromagnetic coil **77** to a position near second electromagnetic coil **78**, membrane assembly **82** may also travel 2 mm in the same direction. Similarly, the frequency at which magnetic ring assembly **76** traverses the space between the first and second electromagnetic coils may be the same frequency at which membrane assembly **82** travels the same distance.

Referring now to FIG. **12**, in the embodiment of implantable pump **20** described in FIGS. **6-9**, blood may enter implantable pump **20** from the left ventricle through inlet cannula **21** and flow downward along pump assembly **70** into delivery channel **100**, defined by the interior surface of pump housing **27** and exterior of pump assembly **70**. Delivery channel **100** begins at the top of stator assembly **72** and extends between tapered section **83** and the interior of pump housing **27**. As the blood moves down tapered section **83**, it is directed through gap **74** and into a vertical portion of delivery channel **100** in the area between pump housing **27** and actuator assembly **95**, and including in the gap between magnetic ring assembly **76** and electromagnet assembly **91**. Delivery channel **100** extends down to flanged portion **87** of stator assembly **72**, which routes blood into flow channel **101**, within which membrane assembly **82** is suspended. By directing blood from inlet cannula **21** through delivery channel **100** to flow channel **101**, delivery channel **100** delivers blood to membrane assembly **82**. By actuating electromagnetic coils **77** and **78**, membrane **97** may be undulated within flow channel **101** to induce wavelike formations in membrane **97** that move from the edge of the membrane towards circular aperture **99**. Accordingly, when blood is delivered to membrane assembly **82** from delivery channel **100**, it may be propelled radially along both the top

and bottom of membrane **97** towards circular aperture **99**, and from there out of outlet **23**.

In accordance with one aspect of the present invention, the undulating membrane pump described herein avoids thrombus formation by placing all moving parts directly within the primary flow path, thereby reducing the risk of flow stagnation. Specifically, the moving components depicted in FIG. **11**, including magnetic ring assembly **76**, suspension rings **79** and **80**, posts **81** and membrane assembly **82** all are located within delivery channel **100** and flow channel **101**. Flow stagnation may further be avoided by eliminating secondary flow paths that may experience significantly slower flow rates.

Turning now to FIGS. **13** and **14**, a lower portion of implantable pump **20**, including flanged portion **87**, membrane assembly **82** and lower housing portion **23** is shown. Delivery channel **100** may be in fluid communication with membrane assembly **82** and flow channel **101** which is defined by a bottom surface of flanged portion **87** and the interior surface of lower housing portion **25**. Flanged portion **87** may comprise feature **102** that extends downward as the bottom of flanged portion **87** moves radially inward. The interior surface of lower housing portion **25** may also slope upward as it extends radially inward. The combination of the upward slope of the interior surface of lower housing portion **25** and the bottom surface of flanged portion **87** moving downward narrows flow channel **101** as the channel moves radially inwards from delivery channel **100** to circular aperture **99** of membrane **97**, which is disposed about pump outlet **23**.

As explained above, membrane assembly **82** may be suspended by posts **81** within flow channel **101** below the bottom surface of flanged portion **87** and above the interior surface of lower housing portion **25**. Membrane assembly **82** may be free to move up and down in the vertical direction within flow channel **101**, which movement is constrained only by suspension rings **79** and **80**. Membrane assembly **82** may be constrained from twisting, tilting or moving in any direction in flow channel **101** other than up and down by rigid posts **81** and by the suspension rings.

Flow channel **101** is divided by membrane **97** into an upper flow channel and a lower flow channel by membrane **97**. The geometry of membrane **97** may be angled such that when membrane assembly **82** is at rest, the top surface of membrane **97** is parallel to the bottom surface of flanged portion **87** and the bottom surface of membrane **97** is parallel to the opposing surface of lower housing portion **25**. Alternatively, membrane **97** may be sized and shaped such that when membrane assembly **82** is at rest, the upper and lower flow channels narrow as they move radially inward from delivery channel **100** to circular aperture **99** in membrane **97**.

Referring now also to FIG. **14**, as rigid membrane ring **96** is caused by posts **81** to move up and down in flow channel **101**, the outermost portion of membrane **97** nearest rigid membrane ring **96**, moves up and down with rigid membrane ring **96**. Membrane **97**, being flexible and having elastic properties, gradually translates the up and down movement of the membrane portion nearest rigid membrane ring **96** along membrane **97** towards circular aperture **99**. This movement across flexible membrane **97** causes wave-like deformations in the membrane which may propagate inwards from rigid membrane ring **96** towards aperture **99**.

The waves formed in the undulating membrane may be manipulated by changing the speed at which rigid membrane ring **96** moves up and down as well as the distance rigid membrane ring **96** moves up and down. As explained above, the amplitude and frequency at which rigid membrane ring **96** moves up and down is determined by the amplitude and frequency at which magnetic ring assembly **76** reciprocates over electromagnet assembly **91** Accordingly, the waves formed in the undulating membrane may be adjusted by changing the frequency and amplitude at which magnetic ring assembly **76** is reciprocated.

When blood is introduced into flow channel **101** from delivery channel **100**, the undulations in membrane **97** cause blood to be propelled toward circular aperture **99** and out of pump housing **27** via outlet **23**. The transfer of energy from the membrane to the blood is directed radially inward along the length of the membrane towards aperture **99**, and propels the blood along the flow channel towards outlet **23** along both sides of membrane **97**.

For example, when rigid membrane ring **96** moves downward in unison with magnetic ring assembly **76**, the upper portion of flow channel **101** near delivery channel **100** expands, causing blood from delivery channel **100** to fill the upper portion of the flow channel near the outer region of membrane **97**. As rigid membrane ring **96** moves upward, the upper portion of flow channel **101** begins to narrow near rigid membrane ring **96**, causing wave-like deformations to translate across the membrane. As the wave propagates across membrane **97**, blood in the upper portion of flow channel **101** is propelled towards circular aperture and ultimately out of pump housing **27** through outlet **23**. Simultaneously, as rigid membrane ring **96** moves upwards, the lower portion of flow channel **101** nearest the outer portion of membrane **97** begins to enlarge, allowing blood from delivery channel **100** to flow into this region. Subsequently, when rigid membrane ring **96** is again thrust downwards, the region of lower portion of flow channel **101** nearest outer portion of membrane **97** begins to narrow, causing wave-like deformations to translate across the membrane that propel blood towards outlet **23**.

By manipulating the waves formed in the undulating membrane by changing the frequency and amplitude at which magnetic ring assembly **76** moves up and down, the pressure gradient within flow channel **101** and ultimately the flow rate of the blood moving through flow channel **101** may be adjusted. Appropriately controlling the movement of magnetic ring assembly **76** permits oxygen-rich blood to be effectively and safely pumped from the left ventricle to the aorta and throughout the body as needed.

In addition to merely pumping blood from the left ventricle to the aorta, implantable pump **20** of the present invention may be operated to closely mimic physiologic pulsatility, without loss of pump efficiency. In the embodiment detailed above, pulsatility may be achieved nearly instantaneously by changing the frequency and amplitude at which magnetic ring assembly **76** moves, to create a desired flow output, or by ceasing movement of the magnetic ring assembly for a period time to create a period of low or no flow output. Unlike typical rotary pumps, which require a certain period of time to attain a set number of rotations per minute to achieve a desired fluid displacement and pulsatility, implantable pump **20** may achieve a desired flow output nearly instantaneously and similarly may cease output nearly instantaneously due to the very low inertia generated by the small moving mass of the moving components of the pump assembly. The ability to start and stop on-demand permits rapid changes in pressure and flow. Along with the frequency and amplitude, the duty cycle, defined by the percentage of time membrane **97** is excited over a set period of time, may be adjusted to achieve a desired flow output and pulsatility, without loss of pump

efficiency. Even holding frequency and amplitude constant, flow rate may be altered by manipulating the duty cycle between 0 and 100%.

In accordance with another aspect of the invention, controller **30** may be programmed by programmer **50** to operate at selected frequencies, amplitudes and duty cycles to achieve a wide range of physiologic flow rates and with physiologic pulsatilities. For example, programmer **50** may direct controller **30** to operate implantable pump **20** at a given frequency, amplitude and/or duty cycle during a period of time when a patient is typically sleeping and may direct controller **30** to operate implantable pump **20** at a different frequency, amplitude and or duty cycle during time periods when the patient is typically awake. Controller **30** or implantable pump also may include an accelerometer or position indicator to determine whether the patient is supine or ambulatory, the output of which may be used to move from one set of pump operating parameters to another. When the patient experiences certain discomfort or a physician determines that the parameters are not optimized, physician may alter one or more of at least frequency, amplitude and duty cycle to achieve the desired functionality. Alternatively, controller **30** or mobile device **60** may be configured to alter one or more of frequency, amplitude and duty cycle to suit the patient's needs.

Implantable pump **20** further may comprise one or more additional sensors for adjusting flow output and pulsatility according to the demand of the patient. Sensors may be incorporated into implantable pump **20** or alternatively or in addition to may be implanted elsewhere in or on the patient. The sensors preferably are in electrical communication with controller **30**, and may monitor operational parameters that measure the performance of implantable pump **20** or physiological sensors that measure physiological parameters of the patients such as heart rate or blood pressure. By using one or more physiological sensors, pulsatile flow may be synchronized with a cardiac cycle of the patient by monitoring blood pressure or muscle contractions, for example, and synchronizing the duty cycle according to the sensed output.

Controller **30** may compare physiological sensor measurements to current implantable pump output. If it is determined by analyzing sensor measurements that demand exceeds current output, frequency, amplitude and/or duty cycle may be automatically adjusted to meet current demand. Similarly, the controller may determine that current output exceeds demand and thus alter output by changing frequency, amplitude and/or duty cycle. Alternatively, or in addition to, when it is determined that demand exceeds current output, an alarm may sound from controller **30**. Similarly, operational measurements from operational sensors may be compared against predetermined thresholds and where measurements exceed predetermined thresholds or a malfunction is detected, an alarm may sound from controller **30**.

Implantable pump **20** is sized and shaped to produce physiological flow rates, pressure gradients and pulsatility at an operating point at which maximum efficiency is achieved. Specially, implantable pump **20** may be sized and shaped to produce physiological flow rates ranging from 4 to 6 liters per minute at pressure gradients lower than a threshold value associated with hemolysis. Also, to mimic a typical physiological pulse of 60 beats per minute, implantable pump **20** may pulse about once per second. To achieve such pulsatility, a duty cycle of 50% may be utilized with an "on" period of 0.5 seconds and an "off" period of 0.5 seconds. For a given system, maximum efficiency at a specific operating frequency, amplitude and voltage may be achieved while producing a flow rate of 4 to 6 liters per minute at a duty cycle of 50% by manipulating one or more of the shape and size of blood flow channels, elastic properties of the suspension rings, mass of the moving parts, membrane geometries, and elastic properties and friction properties of the membrane. In this manner, implantable pump **20** may be designed to produce desirable physiological outputs while continuing to function at optimum operating parameters.

By adjusting the duty cycle, implantable pump **20** may be configured to generate a wide range of output flows at physiological pressure gradients. For example, for an exemplary LVAD system configured to produce 4 to 6 liters per minute at a duty cycle of 50%, optimal operating frequency may be 120 Hz. For this system, flow output may be increased to 10 liters per minute or decreased to 4 liters per minute, for example, by changing only the duty cycle. As duty cycle and frequency operate independent of one another, duty cycle may be manipulated between 0 and 100% while leaving the frequency of 120 Hz unaffected.

The implantable pump system described herein, tuned to achieve physiological flow rates, pressure gradients and pulsatility, also avoids hemolysis and platelet activation by applying low to moderate shear forces on the blood, similar to those exerted by a healthy heart. The moving components are rigidly affixed to one another and do not incorporate any parts that would induce friction, such as mechanical bearings or gears. In the embodiment detailed above, delivery channel **100** may be sized and configured to also avoid friction between moving magnetic ring assembly **76**, suspension rings **79** and **80**, posts **81** and lower housing portion **25** by sizing the channel such that clearances of at least 0.5 mm are maintained between all moving components. Similarly, magnetic ring assembly **76**, suspension rings **79** and **80**, and posts **81** all may be offset from stator assembly **72** by at least 0.5 mm to avoid friction between the stator assembly and the moving parts.

Referring now to FIGS. **15**A and **15**B, an alternative exemplary embodiment of the pump assembly of the present invention is described. Implantable pump **20'** is constructed similar to implantable pump **20** described in FIGS. **7**, **8**, and **12**, in which similar components are identified with like-primed numbers. Implantable pump **20'** is distinct from implantable pump **20** in that membrane assembly **82'** includes skirt **115** coupled to membrane **97'**. Skirt illustratively includes first portion **115***a* and second portion **115***b*. First portion **115***a* of skirt **115** extends upward within delivery channel **100'** toward inlet **21'** in a first direction, e.g., parallel to the longitudinal axis of stator assembly **72'** and/or to the central axis of pump housing **27'**. Second portion **115***b* of skirt **115** curves toward outlet **23'** such that second portion **115***b* is coupled to membrane **97'** so that membrane **97'** is oriented in a second direction, e.g., perpendicular to first portion **115***a* of skirt **115**. For example, skirt **115** may have a J-shaped cross-section, such that first portion **115***a* forms a cylindrical-shaped ring about stator assembly **72'** and second portion **115***b* has a predetermined radius of curvature which allows blood to flow smoothly from delivery channel **100'** across skirt **115** to the outer edge of membrane **97'** and into flow channel **101'**, while reducing stagnation of blood flow. Skirt **115** breaks flow recirculation of blood within delivery channel **100'** and improves hydraulic power generated for a given frequency while minimizing blood damage. In addition, the J-shape of skirt **115** around stator assembly **72'** is significantly more stiff than a planar rigid membrane ring, thereby reducing flexing and fatigue, as well as drag as the blood moves across membrane **97'**.

Skirt **115** exhibits rigid properties under typical forces experienced during the full range of operation of the present invention and may be made of a biocompatible metal, e.g., titanium. Skirt **115** is preferably impermeable such that blood cannot flow through skirt **115**. Post reception sites **98'** may be formed into skirt **115** to engage membrane assembly **82'** with posts **81'**. Alternatively, posts **81'** may be attached to skirt **115** in any other way which directly translates the motion of magnetic ring assembly **76'** to skirt **115**.

As magnetic ring assembly **76'** moves up and down, the movement is rigidly translated by posts **81'** to J-shape of skirt **115** of membrane assembly **82'**. Given the rigidity of the posts, when magnetic ring assembly **76'** travels a certain distance upward or downward, membrane assembly **82'** may travel the same distance. For example, when magnetic ring assembly **76'** travels 2 mm from a position near first electromagnetic coil **77'** to a position near second electromagnetic coil **78'**, membrane assembly **82'** may also travel 2 mm in the same direction. Similarly, the frequency at which magnetic ring assembly **76'** traverses the space between the first and second electromagnetic coils may be the same frequency at which membrane assembly **82'** travels the same distance.

Skirt **115** may be affixed to membrane **97'** and hold membrane **97'** in tension. Membrane **97'** may be molded directly onto skirt **115** or may be affixed to skirt **115** in any way that holds membrane **97'** uniformly in tension along its circumference. For example, skirt **115** may be coated with the same material used to form membrane **97'** and the coating on skirt **115** may be integrally formed with membrane **97'**.

Blood may enter implantable pump **20'** from the left ventricle through inlet cannula **21'** and flow downward along the pump assembly into delivery channel **100'**. As the blood moves down tapered section **83'**, it is directed through gap **74'** and into a vertical portion of delivery channel **100'** in the area between pump housing **27'** and actuator assembly **95'**. As shown in FIG. **15**A, skirt **115** divides delivery channel **100'** into upper delivery channel **100***a* and lower delivery channel **100***b* such that blood flow through delivery channel **100'** is divided into flow channel **101***a* via upper delivery channel **100***a* and flow channel **101***b* via lower delivery channel **100***b*, wherein flow channels **101***a* and **101***b* are separated by membrane **97'**. As will be understood by one of ordinary skill in the art, the volume of blood flow through each of delivery channels **100***a* and **100***b* may depend on the diameter of first portion **115***a* of skirt **115**. For example, the larger the diameter of first portion **115***a* of skirt **115**, the larger the volume of delivery channel **100***a* and the smaller the volume of delivery channel **100***b*. The ratio of the volume of delivery channel **100***a* to the volume of delivery channel **100***b* may be, for example, 1:1, 1:2, 1:3, 1:4, 2:1, 3:1, 4:1, etc., depending on the amount of desired blood flow on each surface of membrane **97'**.

By directing blood from inlet cannula **21'** across skirt **115** within delivery channel **100'**, blood flow is divided into delivery channel **100***a* and **100***b* and to flow channels **101***a* and **101***b*, respectively, such that blood flows across the upper and lower surfaces of membrane **97'** of membrane assembly **82'**. For example, as shown in FIG. **16**A, blood flow through a pump having a planar rigid membrane ring spaced apart a relatively small distance from the pump housing may allow unrestricted blood flow across the upper surface of the flexible membrane while restricting blood flow across the lower surface of the flexible membrane. Whereas, as depicted in FIG. **16**B, blood flow through a pump having a J-shaped skirt may be distributed across both the upper and lower sides of the flexible membrane at a desired ratio.

Referring back to FIG. **15**A, by actuating electromagnetic coils **77'** and **78'**, membrane **97'** may be undulated within flow channels **101***a* and **101***b* to induce wavelike formations in membrane **97'** that move from the edge of membrane **97'** towards circular aperture **99'**. Accordingly, when blood is delivered to membrane assembly **82'** from delivery channel **100'**, it may be propelled radially along both the upper and lower surfaces of membrane **97'** towards circular aperture **99'**, and from there out of outlet **23'**. The distribution of blood flow across the upper and lower surfaces of membrane **97'** reduces recirculation of blood within delivery channel **101'**, and reduces repeated exposure of blood to high shear stress areas, which results in remarkably improved hydraulic performance of implantable pump **20'**.

Referring now to FIG. **17**, the relationship between the maximum hydraulic power of the pump system and the height of the J-shaped skirt is described. As the height of the vertical portion of the skirt increases, the maximum hydraulic power of the pump increases at a non-linear rate. For example, as shown in FIG. **17**, operation of a pump having a planar rigid membrane ring at 60 Hz results in a maximum of 0.15 W of hydraulic power, at 90 Hz results in a maximum of 0.47 W of hydraulic power, and at 120 Hz results in a maximum of 1.42 W of hydraulic power. Operation of a pump having a skirt with an extension height of 2 mm, measured from the top surface of the membrane ring to the top of the J-shaped skirt, at 60 Hz results in a maximum of 0.16 W of hydraulic power, at 90 Hz results in a maximum of 0.85 W of hydraulic power, and at 120 Hz results in a maximum of 1.54 W of hydraulic power. Operation of a pump having a skirt with an extension height of 4 mm at 60 Hz results in a maximum of 0.43 W of hydraulic power, at 90 Hz results in a maximum of 1.06 W of hydraulic power, and at 120 Hz results in a maximum of 2.44 W of hydraulic power. Operation of a pump having a skirt with an extension height of 10 mm at 60 Hz results in a maximum of 0.75 W of hydraulic power, at 90 Hz results in a maximum of 1.89 W of hydraulic power, and at 120 Hz results in a maximum of 4.03 W of hydraulic power. Operation of a pump having a skirt with an extension height of 18 mm at 60 Hz results in a maximum of 1.16 W of hydraulic power, at 90 Hz results in a maximum of 3.08 W of hydraulic power, and at 120 Hz results in a maximum of 9.13 W of hydraulic power. As such, height of skirt **115** is preferably at least 2 mm, and more preferably at least 4 mm, at least 10 mm, and/or at least 18 mm. Accordingly, implantable pump **20'** may be operated at a significantly lower frequency to achieve the same hydraulic output as a pump having a planar rigid membrane ring operating at a higher frequency, while reducing blood damage and increasing fatigue life of membrane **97'** and the springs.

Referring now to FIG. **18**, an alternative exemplary embodiment of the pump assembly of the present invention having a J-shaped skirt is described. Implantable pump **20"** is constructed similar to implantable pump **20'** described in FIG. **15**A, in which similar components are identified with like-double primed numbers. In addition, implantable pump **20"** includes skirt **115'** which is constructed similar to skirt **115** of FIG. **15**A. Implantable pump **20"** is distinct from implantable pump **20'** in that inlet **21"** is coupled to inflow cannula **116**, and outlet **23"** is coupled to outflow cannula **117** such that outflow cannula **117** is disposed coaxially within inflow cannula **116**, as described in U.S. Patent Publication No. 2017/0290967 to Botterbusch, the entire

contents of which are incorporated herein by reference. Accordingly, during operation, blood flows into inlet **21"** via inflow cannula **116**, through delivery channel **100"** into flow channel **101"** across membrane **97"**, and exits through outlet cannula **117** via outlet **23"**.

Referring now to FIG. **19**, another alternative exemplary embodiment of the pump assembly of the present invention is described. Implantable pump **20'"** is constructed similar to implantable pump **20'** described in FIGS. **15**A and **15**B, in which similar components are identified with like-double primed numbers and like-triple primed numbers. Implantable pump **20'"** is distinct from implantable pump **20'** in that implantable pump **20'"** includes rigid ring **118** fixed about stator assembly **72'"**. Ring **118** extends longitudinally within delivery channel **100'"**, parallel to the longitudinal axis of stator assembly **72'"** such that ring **118** forms a cylindrical-shaped ring about stator assembly **72'"**.

In addition, membrane assembly **82'"** of implantable pump **20'"** includes skirt **119** coupled to membrane **97'"**. The upper portion of skirt **119** is substantially parallel to ring **118**, and the lower portion of skirt **119** curves toward outlet **23'"** such that skirt **119** is coupled to membrane **97'"**, perpendicular to ring **118**. For example, skirt **119** may have a J-shaped cross-section, having a predetermined radius of curvature which allows blood to flow smoothly from delivery channels **100***a***"** and **100***b***"** across skirt **119** to the outer edge of membrane **97'"** within flow channel **101'"**, while reducing stagnation of blood flow. Together, ring **118** and skirt **119** breaks flow recirculation of blood within delivery channel **100'"** and improves hydraulic power generated for a given frequency while minimizing blood damage. The distance between ring **118** and skirt **119** as skirt **119** reciprocates in response to the magnetic field generated by magnetic ring assembly **76'"** as described in further detail below, is minimized to reduce leakage of blood between delivery channels **100***a***"** and **100***b***"**, and to reduce blood damage. In addition, the J-shape of skirt **119** is significantly more stiff than a planar rigid membrane ring, thereby reducing flexing and fatigue, as well as drag as the blood moves across membrane **97'"**.

Skirt **119** is preferably impermeable such that blood cannot flow through skirt **119**, and exhibits rigid properties under typical forces experienced during the full range of operation of the present invention and may be made of a biocompatible metal, e.g., titanium. Post reception sites may be formed into skirt **119** to engage membrane assembly **82'"** with the posts. Alternatively, the posts may be attached to skirt **119** in any other way which directly translates the motion of magnetic ring assembly **76'"** to skirt **119**.

As magnetic ring assembly **76'"** moves up and down, the movement is rigidly translated by the posts to skirt **119** of membrane assembly **82'"**. Given the rigidity of the posts, when magnetic ring assembly **76'"** travels a certain distance upward or downward, membrane assembly **82'"** may travel the same distance. For example, when magnetic ring assembly **76'"** travels 2 mm from a position near first electromagnetic coil **77'"** to a position near second electromagnetic coil **78'"**, membrane assembly **82'"** may also travel 2 mm in the same direction. Similarly, the frequency at which magnetic ring assembly **76'"** traverses the space between the first and second electromagnetic coils may be the same frequency at which membrane assembly **82'"** travels the same distance.

Skirt **119** may be affixed to membrane **97'"** and hold membrane **97'"** in tension. Membrane **97'"** may be molded directly onto skirt **119** or may be affixed to skirt **119** in any way that holds membrane **97'"** uniformly in tension along its circumference. For example, skirt **119** may be coated with the same material used to form membrane **97'"** and the coating on skirt **119** may be integrally formed with membrane **97'"**.

Blood may enter implantable pump **20'"** from the left ventricle through inlet **21'"** and flow downward along the pump assembly into delivery channel **100'"**. As the blood moves down tapered section **83'"**, it is directed through gap **74'"** and into a vertical portion of delivery channel **100'"** in the area between pump housing **27'"** and actuator assembly **95'"**. As shown in FIG. **19**, ring **118** divides delivery channel **100'"** into upper delivery channel **100***a***"** and lower delivery channel **100***b***"** such that blood flow through delivery channel **100'"** is divided into flow channel **101***a***"** via upper delivery channel **100***a***"** and flow channel **101***b***"** via lower delivery channel **100***b***"** and across skirt **119** with minimal leakage between delivery channel **100***a***"** and delivery channel **100***b***"**, wherein flow channels **101***a***"** and **101***b***"** are separated by membrane **97'"**.

As will be understood by one of ordinary skill in the art, the volume of blood flow through each of delivery channels **100***a***"** and **100***b***"** may depend on the diameter of ring **118** and the curvature of radius of skirt **119**. For example, the larger the diameter of ring **118**, the larger the volume of delivery channel **100***a***"** and the smaller the volume of delivery channel **100***b***"**. The ratio of the volume of delivery channel **100***a***"** to the volume of delivery channel **100***b***"** may be, for example, 1:1, 1:2, 1:3, 1:4, 2:1, 3:1, 4:1, etc., depending on the amount of desired blood flow on each surface of membrane **97"**. By directing blood from inlet cannula **21"** across ring **118** within delivery channel **100'"**, blood flow is divided into delivery channels **100***a***"** and **100***b***"** and across skirt **119** to flow channels **101***a***"** and **101***b***"**, respectively, such that blood flows across the upper and lower surfaces of membrane **97'"** of membrane assembly **82'"**.

By actuating electromagnetic coils **77'"** and **78"**, membrane **97'"** may be undulated within flow channels **101***a***"** and **101***b***"** to induce wavelike formations in membrane **97'"** that move from the edge of membrane **97'"** towards circular aperture **99'"**. Accordingly, when blood is delivered to membrane assembly **82'"** from delivery channel **100'"**, it may be propelled radially along both the upper and lower surfaces of membrane **97'"** towards circular aperture **99"**, and from there out of outlet **23'"**. The distribution of blood flow across the upper and lower surfaces of membrane **97'"** reduces recirculation of blood within delivery channel **101'"**, and reduces repeated exposure of blood to high shear stress areas, which results in remarkably improved hydraulic performance of implantable pump **20'"**.

Referring now to FIG. **20**, yet another alternative exemplary embodiment of the pump assembly of the present invention is described. Implantable pump **20''''** is constructed similar to implantable pump **20'"** described in FIG. **19**, in which similar components are identified with like-primed, like-triple primed, and like-quadruple primed numbers. Implantable pump **20''''** is distinct from implantable pump **20'"** in that implantable pump **20''''** includes expandable portion **120** coupled between ring **118'** and the upper portion of skirt **119'**. Expandable portion **120** is impermeable and prevents leakage between delivery channels **100***a***'"** and **100***b***'"**. Preferably, expandable portion **120** has a pleated configuration that may expand and contract to permit efficient reciprocation of skirt **119'** relative to ring **118'**. For example, expandable portion **120** may comprise a plurality of bellows having a first end coupled to ring **118'** and a second end coupled to skirt **119'**.

Expandable portion **120** may be molded directly onto skirt **119'** or may be affixed to skirt **119'** in any way that holds expandable portion **120** uniformly along its circumference. Similarly, expandable portion **120** may be molded directly onto ring **118'** or may be affixed to ring **118'** in any way that holds expandable portion **120** uniformly along its circumference. Skirt **119'** may be coated with the same material used to form membrane **97'''** and/or expandable portion **120** and the coating on skirt **119'** may be integrally formed with membrane **97'''** and/or expandable portion **120**.

As shown in FIG. **20**, expandable portion **120** extends longitudinally within delivery channel **100''''**, parallel to the longitudinal axis of stator assembly **72''''**. Thus, during operation, blood is directed from inlet cannula **21''''** across ring **118'** and expandable portion **120** within delivery channel **100''''**, and divided into delivery channels **100***a*''' and **100***b*''' and across skirt **119'** to flow channels **101***a*''' and **101***b*''', respectively, such that blood flows across the upper and lower surfaces of membrane **97''''** of membrane assembly **82''''**.

As magnetic ring assembly **76''''** moves up and down, the movement is rigidly translated by the posts to skirt **119'** of membrane assembly **82''''**, and thereby to expandable portion **120**. For example, when magnetic ring assembly **76''** travels a certain distance upward or downward, membrane assembly **82''''** travels the same distance causing expandable portion **120** to expand and contract within delivery channel **100''''** parallel to the longitudinal axis of stator assembly **72''''** by the same distance. Similarly, the frequency at which magnetic ring assembly **76''''** traverses the space between the first and second electromagnetic coils may be the same frequency at which membrane assembly **82''''** travels the same distance.

Referring now to FIGS. **21**A-**21**H, various configurations for energizing the implantable pumps of the present invention, e.g., implantable pumps **20**, **20''**, **20'''**, and **20''''**, described above are provided. As shown in FIG. **21**A, controller **30** includes output port **33** which is electrically coupled to cable **29** as described above, which in turn is coupled to the implantable pump. Controller **30** also includes power connector **103**, which may be electrically coupled to a battery, an extension port electrically coupled to a battery, or an AC/DC power supply. For example, power connector **103** may be male, while the connector of the corresponding battery or extension port is female.

In one embodiment, as shown in FIG. **21**B, controller **30** includes two power connectors, e.g., first power connector **103** and second power connector **104**. As described above, first power connector **103** may be electrically coupled to a first battery, a first extension port electrically coupled to a first battery, or a first AC/DC power supply, and second power connector **103** may be electrically coupled to a second battery, a second extension port electrically coupled to a second battery, or a second AC/DC power supply. In this embodiment, first power connector **103** and second power connector **104** may both be male. In addition, controller **30** includes circuitry for switching between power sources such that energy is selectively transmitted to controller **30** from at least one of the first or second battery/power supply. For example, the circuitry may switch between a first and second battery intermittently, or after the remaining power level of one of the batteries reaches a predetermined threshold.

Referring now to FIGS. **21**C-E, configurations are illustrated wherein controller **30** is directly electrically coupled to battery **40**, such that controller **30** and battery **40** may be worn by the patient together, e.g., via a purse, shoulder bag, or holster. As shown in FIG. **21**C, controller **30** of FIG. **21**A may be electrically coupled to battery **40** via power connector **103**, wherein power connector **103** is male and battery **40** has a corresponding female connector. For example, FIG. **21**D illustrates controller **30** electrically coupled to battery **40**, wherein battery **40** has a smaller size, and therefore lower capacity, and FIG. **21**E illustrates controller **30** electrically coupled to battery **40**, wherein battery **40** has a larger size, and therefore higher capacity. As will be understood by a person of ordinary skill in the art, battery **40** may have various sizes depending on the need of the patient.

Referring now to FIGS. **21**F-H, configurations are illustrated wherein controller **30** is remotely electrically coupled to battery **40**, such that the weight and volume of controller **30** and battery **40** are distributed and may be worn by the patient separately, e.g., via a belt or a vest. As shown in FIG. **21**F, cable **41**, which electrically couples controller **30** to battery **40**, is electrically coupled to first power connector port **105** via strain relief **106**, which is a hardwired junction between cable **41** and first power connector port **105**. Power connector port **105** includes power connector **107**, which may be electrically coupled to a battery. For example, power connector **107** may be male, while the connector of the corresponding battery is female.

As shown in FIG. **21**G, controller **30** may be remotely electrically coupled to battery **40** via cable **41**. Cable **41** is electrically coupled at one end to controller **30** via second power connector port **108** and strain relief **114**, which is a hardwired junction between cable **41** and second power connector port **108**, and electrically coupled at another end to battery **40** via first connector port **105** and strain relief **106**. For example, power connector **103** of controller **30** may be male while the connector of corresponding second power connector port **108** is female, and power connector **107** of first power connector port **105** may be male while the connector of corresponding battery **40** is female.

In one embodiment, as shown in FIG. **21**H, controller **30** may be remotely electrically coupled to multiple batteries, e.g., battery **40**A and battery **40**B, via a single second power connector port **108**. As shown in FIG. **21**H, second power connector port **108** includes first strain relief **114**A and second strain relief **114**B, such that controller **30** is remotely electrically coupled to battery **40**A via cable **41**A and remotely electrically coupled to battery **40**B via cable **41**B. Specifically, cable **41**A is electrically coupled at one end to controller **30** via second power connector port **108** and first strain relief **114**A, and electrically coupled at another end to battery **40**A via first connector port **105**A and strain relief **106**A, and cable **41**B is electrically coupled at one end to controller **30** via second power connector port **108** and second strain relief **114**B, and electrically coupled at another end to battery **40**B via first connector port **105**B and strain relief **106**B. In this embodiment, controller **30** may include circuitry for switching between battery **40**A and battery **40**B such that energy is selectively transmitted to controller **30** from at least one of battery **40**A and battery **40**B. For example, the circuitry may switch between battery **40**A and battery **40**B intermittently, or after the remaining power level of one of the batteries reaches a predetermined threshold. Alternatively, controller **30** may receive energy from battery **40**A and battery **40**B simultaneously.

In another embodiment, as shown in FIG. **21**I, controller **30** is electrically coupled to AC/DC power supply **109**, which may be plugged into an electrical outlet via AC plug **113**, e.g., when the patient is resting bedside. Specifically, AC/DC power supply **109** is electrically coupled to controller **30** via cable **41**, such that cable **41** is electrically coupled at one end to controller **30** via second power connector port

108 and strain relief 114, and electrically coupled at another end to AC/DC power supply 109 via first power supply port 110. In addition, AC/DC power supply 109 is electrically coupled to plug 113 via cable 112 and second power supply port 111.

Controller 30 may include an internal battery, such that the internal battery powers controller 30 and the implantable pump during the time required for battery 40 to be replaced and/or recharged. Accordingly, controller 30 may include circuitry for switching between power sources such that energy is transmitted to controller 30 from the internal battery while battery 40 is disconnected from controller 30, and from battery 40 when battery 40 is electrically coupled to controller 30. In addition, the circuitry may allow battery 40 to charge the internal battery while also energizing the implantable pump until the internal battery is recharged to a desired amount, at which point the circuitry allows battery 40 to solely energize the implantable pump. Similarly, when controller 40 is electrically coupled to AC/DC power supply 109, the circuitry may allow AC/DC power supply 109 to charge the internal battery while also energizing the implantable pump until the internal battery is recharged to a desired amount, at which point the circuitry allows AC/DC power supply 109 to solely energize the implantable pump.

In accordance with some aspects of the present invention, systems and methods for controlling an implantable pump constructed in accordance with the principles of the present invention, e.g., implantable pumps 20, 20", 20"', and 20"", without requiring position, velocity, or acceleration sensors are provided. Specifically, an exemplary controller, e.g., controller 30, for the implantable pump may only rely on the actuator's current measurement. The controller is robust to pressure and flow changes inside the pump head, and allows fast change of pump's operation point. For example, the controller includes, a two stage, nonlinear position observer module based on a reduced order model of the electromagnetic actuator. As the actuator is very small regarding its performance requirements, linear approximation of the equivalent electric circuit is insufficient. To meet the required operational range of the controller, the controller includes parameters' variations regarding state variables. Means to identify the actuator's model are given by a recursive least squares (RLS) so they can be incorporated in a sensible way into the position observer module of the controller. A forgetting factor is further included in the RLS to capture model parameters' variations regarding state variables.

Referring now to FIG. 22, a flow chart illustrating steps of exemplary method 2200 for controlling an implantable pump constructed in accordance with the principles of the present invention, e.g., implantable pumps 20, 20", 20"', and 20"". First, a finite element method (FEM) model of an electromagnetic actuator, e.g., electromagnet assembly 91 and magnetic ring assembly 76, is transformed into a lumped parameters model represented by a system of ordinary differential equations (ODEs). The FEM model is set up by creating a subset of the actuator's geometry to save computing time as illustrated in FIG. 23. At step 2202, co-energy W of the implantable blood pump system is computed for various magnetic ring positions and coil currents, as illustrated in FIG. 24A. For example, co-energy W may be approximated by a lookup table that stores the output co-energy W values of the FEM model simulation.

At step 2204, partial derivatives of co-energy W are computed and identified to the parameters of an equivalent circuit which is expressed as:

$$V_{in}(t) = RI + L(x, I)\frac{dI}{dt} + E(x, I)\frac{dx}{dt}$$

where:

$$L(x, I) = \frac{\partial^2 W(x, I)}{\partial I^2}$$

$$E(x, I) = \frac{\partial^2 W}{\partial x \partial I}$$

The one degree-of-freedom motion equation of the magnetic ring of the implantable pump gives:

$$m\ddot{x}(t) = F_{mag}(x,I) + F_{springs}(x) + F_{membrane}(t)$$

where:

$$F_{mag} = \frac{\partial W(x, I)}{\partial x}$$

$$F_{springs} = ax^3 + bx$$

V_{in}=input voltage
x=magnetic ring position
I=coil current
R=coil resistance
L=coil inductance
E=back EMF factor

FIGS. 24B, 24C, and 24D illustrate the force derived from the co-energy W as a function of the magnetic ring's position and coil current, the equivalent circuit's inductance derived from the co-energy W as a function of the magnetic ring's position and coil current, and the equivalent circuit's EMF coefficient derived from the co-energy W as a function of the magnetic ring's position and coil current, respectively. FIG. 25 is a graph illustrating the relationship between spring reaction force and position of the magnetic ring of the implantable pump. FIG. 26 is a schematic representation of the parameters of the equivalent circuit and the one degree-of-freedom motion equation of the magnetic ring of the implantable pump described above.

Springs reaction force $F_{springs}$ is identified to a third-degree polynomial to take into account design-induced nonlinearities that are measured by the manufacturer of the electromagnetic actuator. Membrane force $F_{membrane}$ is supposed bounded and piecewise continuous. This vague description of the membrane force is motivated by the lack of sufficient knowledge of the fluid-structure interaction that takes place between pump's membrane and fluid, as well as the possibility to synthetize a controller that will not require more hypothesis of this force than what has been given.

At step 2206, the controller operates the electromagnetic actuator of the implantable pump to cause the moving component, e.g., magnetic ring assembly 76, to reciprocate at a predetermined stroke, e.g., frequency and amplitude. At step 2208, the controller receives a signal indicative of the alternating current of the system, e.g., coil current, from a current sensor positioned, for example, inside the power electronics of the implantable pump system.

For example, as illustrated in FIG. 27A, the implantable blood pump, which can be considered an inductive load,

may be driven with an H bridge configuration. As illustrated in schematic of the power electronics of FIG. **27**A, the power electronics may include H bridge **130**, shunt resistor **132**, current sensor **140**, and optional voltage sensor **150**. The H bridge, illustrated in FIG. **27**B, is driven to generate a certain voltage waveform, while powered from a power supply, e.g., battery **40**, directly or through a DC/DC voltage converter. As will be understood by a person having ordinary skill in the art, the power electronics could include a single H bridge, with both coils in series or in parallel, or two H bridges, with one H bridge per coil.

FIG. **27**C is a schematic of the current sensor for measuring the current of the actuator. FIG. **27**D is a schematic of an optional voltage sensor for measuring the voltage of the actuator. The use of the voltage feedback is optional, given that the algorithm controls the H bridge and therefore knows the imposed voltage. As illustrated in FIG. **28**, Analog to Digital Converter (ADC) sampling is synchronized with the middle point of the transistors pulse-width modulation (PWM) signals to remove the transistors switching glitch noise from both the current and voltage measurements. Accordingly, the current and/or pump voltage measurements are sent to the algorithm running on the controller, and the algorithm estimates the position of the actuator and determines the H bridge voltage required to impose a certain position oscillation.

Specifically, from the current measurement, the controller is able to control the excitation of the deformable membrane, e.g., membrane **97**, while being robust to the almost unmodelled force of the deformable membrane $F_{membrane}$. Thus, the implantable pump system may not require position, velocity, or acceleration sensors. For example, the controller includes a position observer module that has two stages. During the first stage (step **2210**), the position observer module estimates the velocity of the magnetic ring based on the alternating current measurement and the parameters of an equivalent circuit using the equation described above:

$$V_{in}(t) = RI + L(x, I)\frac{dI}{dt} + E(x, I)\frac{dx}{dt}$$

For example, the estimated velocity may be expressed as:

$$\hat{\dot{x}} = \frac{1}{E(x, I)}\left(V_{in} - RI - L(x, I)\frac{dI}{dt}\right)$$

The derivative in of the above equation will make the estimation extremely sensitive to measurement noise if left as it is. To deal with this estimation problem a derivate estimator is developed:

$$\frac{\bar{dI}}{dt}(t) = -\frac{6}{T^3}\int_{t-T}^{t}(T - 2\tau)I(t - \tau)d\tau$$

where T is the length of an integration window. This estimation is straightforward to implement as a discrete finite impulse response (FIR) filter by using the trapezoidal method:

$$\frac{\bar{dI}}{dt}(kT_s) = -\frac{6}{(NT_s)^3}\sum_{i=0}^{N} w_i(NT_s - 2iT_s)I(kT_s - iT_s)d\tau$$

where N is an integer chosen so that $T=NT_s$,

$$w_0 = w_N = \frac{T_s}{2}$$

and $w_i=T_s$, i=1, . . . N−1.

Next, the second stage of the position observer module is implemented (step **2212**), where the position observer module determines the velocity of the magnetic ring based on the estimated velocity calculated during step **2210**. For example, it follows that, if $\tilde{x}$ and $\dot{\tilde{x}}$ are the observed position and velocity, the position observer module could be expressed as:

$$\begin{bmatrix} \dot{\tilde{x}} \\ \ddot{\tilde{x}} \end{bmatrix} = A\begin{bmatrix} \tilde{x} \\ \dot{\tilde{x}} \end{bmatrix} + \begin{bmatrix} 0 \\ F(t) \end{bmatrix} + \begin{bmatrix} k_1 \\ k_2 \end{bmatrix}(\hat{x} - \tilde{x})$$

where A is a constant square matrix regrouping the linear terms of the estimated velocity above and F(t) is the function regrouping the nonlinear elements, and k_1 and k_2, two gains to be chosen to guarantee:

$$\lim_{t\to\infty}\begin{bmatrix} x - \tilde{x} \\ \dot{x} - \dot{\tilde{x}} \end{bmatrix} = 0$$

At step **2214**, the position observer module of the controller determines the position of the magnetic ring based on the determined velocity above. Accordingly, from the observed position of the magnetic ring, the stroke controller will be able to set the excitation of the deformable membrane via the electromagnetic actuator to a desired frequency and amplitude, while limiting overshoot. Thus, at step **2216**, the controller cancels errors due to un-modeled dynamics of the implantable pump to limit overshoot. For example, as illustrated in FIG. **29**A, the controller may include a feedforward module and a PI controller module. The feedforward module takes as input the desired position x_d at each time step to compute input voltage as:

$$V_{in} = RI_d + L\frac{dI_d}{t} + E\frac{dx_d}{dt}$$

$$F_{mag}(x_d, I_d) = m\ddot{x}_d - F_{springs} - \alpha\frac{dx_d}{dt}$$

where I_d can be computed as:

$$I_d=\phi(x_d,F_{mag})$$

The reference signal x_d is generated as:

$$x_d(t)=S(t)\sin(\varphi)(t))$$

$$\varphi(t)=2\pi f(t)$$

$$H(s) = \frac{k_f^3}{(s+k_f)^3} = \frac{S}{S_d}(s) = \frac{f}{f_d}(s)$$

where k_f is a positive, real number that guarantee the stability of H(s).

Then, the remaining errors due to un-modeled dynamics are cancelled by PI controller module by adjusting the excitation signal. This could be implemented using various methods. For example, its instantaneous value could be directly modified, or alternatively, another method is to modify its amplitude, or both its amplitude and its instantaneous value, on different feedback loops as illustrated in FIG. **29**B. If the amplitude modification is used, one way to estimate it is to define an amplitude estimator $\hat{S}(t)$ that is valid if x(t) is sufficiently close to a sinus function:

$$\hat{S}(t) = \sqrt{\hat{x}(t)^2 + \hat{x}\left(t - \frac{1}{4f}\right)^2}$$

At step **2218**, the controller adjusts operation of the electromagnetic actuator to cause the magnetic ring to reciprocate at an adjusted frequency and/or amplitude, thereby causing the deformable membrane to produce an adjusted predetermined blood flow across the implantable pump.

To capture the variations of inductance and back EMF coefficient with magnetic ring's position and coil current, a recursive least square estimator is used by the controller.

The parameters R, L and E described above are unknown and slowly time varying. The variables V_{in}, I and x are piecewise continuous and bounded, and all equal to zero at t=0. The problem is set by integrating (1) over t:

$$I = \frac{1}{L}\int V_{in} + \frac{R}{L}\int I + \frac{E}{L}x$$

which can be expressed as:

$$y = \Psi^T\theta$$

$$\Psi^T = \left[\int V_{in} \quad \int I \quad x\right]$$

$$\theta = \left[\frac{1}{L} \quad \frac{R}{L} \quad \frac{E}{L}\right]$$

For each sample n>0:

$$\hat{\theta}_n = \hat{\theta}_{n-1} + K_n(y_n - \hat{y}_n)$$

$$\hat{y}_n = \Psi_n^T\hat{\theta}_{n-1}$$

$$K_n = \Psi_n Q_n$$

$$Q_n = \frac{P_{n-1}}{\lambda + \Psi_n^T P_{n-1}\Psi_n}$$

$$P_n = \frac{1}{\lambda}\left(P_{n-1} - \frac{P_{n-1}\Psi_n\Psi_n^T P_{n-1}}{\lambda + \Psi_n^T P_{n-1}\Psi_n}\right)$$

where λ is a forgetting factor chosen so $\lambda<1$, P_0 is the initial covariance matrix, and $\hat{\theta}_0$ is the initial estimate of the parameters.

The resulting estimation data is then fit to polynomials of appropriate degree, and stored into lookup tables that associate for each (x, l) combination the corresponding inductance and emf factor. The lookup tables are used in the velocity estimator:

$$\hat{L}(x, I), \hat{E}(x, I) = [1 \ \ldots \ x^m]\begin{bmatrix} a_{00} & \ldots & a_{0,n} \\ \vdots & \ddots & \vdots \\ a_{m,0} & \ldots & a_{m,n} \end{bmatrix}\begin{bmatrix} 1 \\ \vdots \\ I^n \end{bmatrix}$$

Experimental Results

A numerical model of the implantable pump and the controller was built under Matlab/Simulink to test the implementation of the controller and model parameters' identification. The actuator model is compared to measurement and adjusted accordingly. The springs' reaction force is measured by using a pull tester, which is also used to measure the magnetic force of the actuator by applying an arbitrary constant electric current on the electromagnetic coils of the actuator while measuring force. The back EMF coefficient was derived from the force measured at different electric currents and magnetic ring positions. Electric inductance and resistance may be estimated with a LRC meter when the magnetic ring's motion is blocked to cancel the effect of the back EMF. As LRC meters' input current is limited (<20 mA), inductance may only be estimated in this limited area. In general, the performances of the real actuator are reduced compared to the model (lower inductance, magnetic force and EMF). This may be due to an imperfect manufacturing process, e.g., the winding of the coils. The membrane force may be emulated by a viscous friction term that is a sensible first approximation:

$$F_{membrane}(t) = \mu(t)\dot{k}$$

With these verifications, the parameters' variations are identified and the controller structure is tested. In particular, different position observer implementations are compared to show the interest of using varying electric parameters instead of linear approximations.

The results of the identification are shown in FIGS. **30**A-**30**C. To guarantee a quick convergence, two excitation signals are applied to the actuator. A voltage excitation that contains a high frequency (500 Hz) square wave voltage makes the inductance's voltage to never be close to zero, and a low frequency (0.1 Hz) sinus component for the resistance's voltage reach every position. To ensure that back EMF is represented in the response, an external sinus force is simulated at 50 Hz. To filter out high frequency variations as well as eventual noise, while capturing the low frequency variations of the parameters, A is set to 0.999 via a trial and error approach. The recursive least square identification was run with different initial conditions. Measurement errors (noises, bias, gain) were simulated to verify that their effects would not hinder convergence and help to diagnostic future experimental issues. The RLS algorithm filters out high frequency noises very easily, but gain errors lead to over or underestimation of parameters while bias and low frequency noise increase estimation error over time.

A discrete version of the controller is implemented on Simulink to emulate what would be done by compiling it on a hardware target. As the frequency response of the derivative estimator described above depends on the length of the integration window and the sampling rate, and the signals to derivate may have frequency up to 100 Hz. We set $T_s=2.10^{-5}$ s and N=6 (i.e. integration window of 1, 2.10^{-4} s), which is a good trade between noise attenuation and performance. FIGS. **31**A and **31**B shows the response of the actuator from

startup at t=0 s to a nominal constant operation point, i.e. a constant amplitude and frequency. Current and magnetic ring position are both reasonably sinusoidal, and after a transition period, the amplitude of position reaches the desired amplitude, and the position observer module output keeps track of the variation of position.

FIGS. **32**A and **32**B shows two cases of change of operation points: a change of frequency and a change of stroke, which are two ways to increase or decrease blood flow through by the pump. As shown in FIGS. **32**A and **32**B, overshoots appear during the change of stroke. If not kept below a safe level, the overshoots could create overstress that could damage the membrane and the springs. Overshoot may be avoided by making the desired stroke signal change smoother.

FIGS. **33**A-**33**D is a comparison between 4 position observer modules which are different through their first stage. In each case, inductance and back EMF are implemented as constant approximation and as functions. As the controller must maintain stroke over a wide range of strokes and frequencies, and as different reaction forces of the membrane are unknown, combinations of those three parameters must be tested to evaluate the performance of the controller. To do so the variation of the membrane force is emulated according to flow and pressure inside the pump head by varying μ, and an error variable e is created that is evaluated over a range of strokes, frequency and μ:

$$e(S_d, f_d) = \max_{\mu}(|S_d - 0.5(\max x - \min x)|)$$

where max x & min x are computed from one period of oscillation. This formulation of e can be compared to a maximal admissible error ε: every operation point $[S_d, f_d]$ which presents $e<\varepsilon$ can be reached safely (stroke will be maintained to deliver the required flow without the risk of damaging the device by an overshoot). With this performance indicator, it is observed that taking into account the variations of the inductance and back EMF in the velocity estimator results in an increase of the operation range of the stroke controller.

Referring now to FIG. **34**, an exemplary multistage control of a controller relying on position measurement constructed in accordance with the principles of the present invention is provided. Specifically, magnetic ring position may be measured via one or more sensors and used to control operation of the pump. For example, a sensor such as a hall effect sensor may be coupled to a component that remains stationary relative to the stator assembly, e.g., the stator assembly itself or the housing of the pump. In addition, a small, permanent magnet may be coupled to any mobile component of the pump that moves relative to the stator assembly, e.g., the magnetic ring assembly or the rigid membrane ring. Accordingly, the intensity of the magnetic field generated by the permanent magnet may be measured via the hall effect sensor during operation of the pump. For example, as the permanent magnet moves close the hall effect sensor, the intensity of the magnetic field generated by the permanent magnet and measured by the sensor increases.

The control scheme illustrated in FIG. **34** based on pump dynamics may be developed with the magnetic ring position measurement and the magnetic coils' current described above. First, an appropriate trajectory may be based on the inverse dynamics of the pump system.

The appropriate trajectory may be written as:

$$[x_d\ \dot{x}_d\ l_d]^T$$

The dynamics of the pump may be written as:

$$\begin{bmatrix} \ddot{x} \\ \dot{l} \end{bmatrix} = \begin{matrix} \dfrac{F_a(x, l) - \mu(t)\dot{x}}{m + m_f(t)} \\ \dfrac{1}{L(x, l)}V_{in} - \dfrac{R}{L(x, l)}l - \dfrac{E(x, l)}{L(x, l)}\dot{x} \end{matrix}$$

Where F_a is the magnetic force generated by the actuator plus the reaction force of the suspension springs. Given the desired stroke amplitude and frequency S_d and f_d, it is possible to generate a feasible trajectory for the pump. Such a trajectory exists if the desired position x_d may be derived twice with respect to time, and those derivatives v_d and $\ddot{x}_d$ are continuous. As the force map $F_a(x, l)$ is a diffeomorphism, there exists a map $\varphi_a(x, F_d)$ such as:

$$l_d = \varphi_a(x, F_d)$$

$$F_d = (m + m_{f_k})\ddot{x}_d + \hat{\mu}_k v_d$$

With $\hat{m}_{f_k}$ and $\hat{\mu}_k$, two estimates of m_f and μ may be computed by the Kalman filter block. Moreover, the feedforward voltage V_{ff} that is required for the pump to follow the desired trajectory may be computed for each k>0 (each number is related to time as $t=kT_s$, T_s is the sampling period of the controller) as:

$$V_{ff} = RI_d + E(x_d, l_d)v_d + L(x_d, l_d)\dot{i}_d$$

As any model is stained with errors, a feedback voltage alone is not enough to follow the trajectory with enough accuracy. Thus, to complete the control scheme of FIG. **34**, a feedback voltage is added, which may be written as:

$$V_{fb_k} = Ke_k$$

With $K=[k_1\ k_2\ k_3\ k_4]$ and the tracking error e_k such as $e_k^T = [x_d - \hat{x}_k\ v_d - \hat{v}_k\ l_d - l_k\ z_k]$ and $z_k = z_{k-1} + T_s(x_d - x_k)$. $\hat{x}_k$ and $\hat{v}_k$ are estimates of x and ẋ that are computed by the extended Kalman filter. A suitable choice of matrix K may be selected, e.g., by using the Linear Quadratic Integral method, applied to a linear approximation of pump dynamics.

The purpose of the Extended Kalman filter is to compute an accurate estimation of the variables x and ẋ and time varying parameters μ(t) and $m_f(t)$, given measurements of x and l that are corrupted by noise.

Taking the dynamics of the pump that are discretized using Euler's method, the estimate variables and parameters may be written in a vector as:

$$X_k^T = [x_k\ v_k\ \mu_k\ m_{f_k}],$$

As the position x_k is measured, $x_k = CX_k$ with C=[1 0 0 0]. For each k>0 we have:

$$\hat{X}_{k+1|k} = \begin{bmatrix} \hat{x}_{k|k} \\ \hat{v}_{k|k} \\ \hat{\mu}_{k|k} \\ \widehat{m_f}_{k|k} \end{bmatrix} + T_s \begin{bmatrix} v_{k|k} \\ \dfrac{(F_{actuator}(x_k, I_k) - \mu_k v_k)}{m + m_{f_k}} \\ 0 \\ 0 \end{bmatrix}$$

$$P_{k+1|k} = J_k P_{k|k} J_k^T + Q$$

where $\hat{X}_{k+1|k}$ is a predicted estimate of vector X_k^T and $P_{k+1|k}$ is the predicted covariance matrix. J_k is the jacobian matrix:

$$J_k = \begin{bmatrix} 1 & T_S & 0 & 0 \\ \frac{T_s}{m+m_{f_{k|k}}}\frac{\partial F_a(\hat{x}_{k|k}, I_k)}{\partial x} & -\frac{T_S}{m+m_{f_{k|k}}}\mu_{k|k}+1 & -\frac{T_S}{m+m_{f_{k|k}}}v_{k|k} & -\frac{T_s}{(m+m_{f_{k|k}})^2}(F_a(\hat{x}_{k|k}, I_k)-\mu_{k|k}v_{k|k}) \\ 0 & 0 & 1 & 0 \\ 0 & 0 & 0 & 1 \end{bmatrix}$$

And Q is a process covariance matrix made of 4 diagonal terms $q_{1,\ldots,4}>0$:

$$Q = \begin{bmatrix} q_1 & 0 & 0 & 0 \\ 0 & q_2 & 0 & 0 \\ 0 & 0 & q_3 & 0 \\ 0 & 0 & 0 & q_4 \end{bmatrix}$$

With the measurement covariance R>0 the correction gain L_{k+1}, the corrected estimate $\hat{X}_{k+1|k+1}$ and covariance matrix $P_{k+1|k+1}$ are computed as:

$$L_{k+1}=P_{k+1|k}C^T(CP_{k+1|k}C^T+R)^{-1}$$

$$\hat{X}_{k+1|k+1}=\hat{X}_{k+1|k}+L_k(x_k-\hat{x}_{k+1|k})$$

$$P_{k+1|k+1} = \left(\begin{bmatrix} 1 & 0 & 0 & 0 \\ 0 & 1 & 0 & 0 \\ 0 & 0 & 1 & 0 \\ 0 & 0 & 0 & 1 \end{bmatrix} - L_k C\right)P_{k+1|k}$$

In addition, blood flow from the inlet out through the outlet of the pump may be estimated based on the Kalman filter estimation of μ described above. For example, as it has been demonstrated experimentally that there exists a strong correlation between the variation of $\hat{\mu}$ and the variation of pump flowrate q_f with a given desired stroke and frequency, q_f may be written as a functional such as:

$$q_f=f(\hat{\mu},s_d,f_d)$$

In accordance with this function, an estimation of pump flow may be computed that does not require a flow sensor and which may be used to set the operating point of the pump.

Moreover, the Kalman filter estimation described above may be used to detect a fault of the pump system. Specifically, the estimation residual of the Kalman filter may be used to monitor the operating conditions of the pump at all times and may detect almost instantly any change that would necessarily be caused by a fault. Thus, for each k>0 the residual ε_k may be computed as:

$$\varepsilon_k=x_k-\hat{x}_{k|k}$$

Thus, a statistical analysis of ε_k may be run to detect anomalies. For example, the average value of ε_k may be computed over an arbitrary number of samples. In nominal operation conditions, the average value of the residual should be close to zero. Accordingly, any time the value is determined to be higher or lower than a threshold value, a mechanical fault may be detected. In addition, abnormal operation conditions may be detected by comparing the deviation of the estimated values and parameters with their expected nominal values.

Referring now to FIG. **35**, another exemplary sensorless multistage control of a controller constructed in accordance with the principles of the present invention is provided. The control scheme of FIG. **35** is constructed similar to the control scheme of FIG. **34**, except that the Kalman filter of FIG. **35** does not rely on magnetic ring position measurement. Instead, the Kalman filter of FIG. **35** relies on a velocity estimation $\hat{v}_{1_k}$.

Taking the dynamics of the pump that are discretized using Euler's method, the estimate variables and parameters may be written as a vector

$$X_k^T=[x_k\ \hat{v}_{1_k}\ \mu_k\ m_{f_k}].$$

As the velocity $\hat{v}_{1_k}$ may be estimated by a velocity observer module, $\hat{v}_{1_k}=CX_k$ with C=[0 1 0 0]. For each k>0:

$$\hat{X}_{k+1|k} = \begin{bmatrix} \hat{x}_{k|k} \\ \hat{v}_{k|k} \\ \hat{\mu}_{k|k} \\ \widehat{m_f}_{k|k} \end{bmatrix} + T_s\begin{bmatrix} v_{k|k} \\ \frac{(F_{actuator}(x_k, I_k)-\mu_k v_k)}{m+m_{f_k}} \\ 0 \\ 0 \end{bmatrix}$$

$$P_{k+1|k} = J_k P_{k|k} J_k^T + Q$$

Where $\hat{X}_{k+1|k}$ is a predicted estimate of vector X_k^T and $P_{k+1|k}$ is the predicted covariance matrix. J_k is the jacobian matrix:

$$J_k = \begin{bmatrix} 1 & T_S & 0 & 0 \\ \frac{T_s}{m+m_{f_{k|k}}}\frac{\partial F_a(\hat{x}_{k|k}, I_k)}{\partial x} & -\frac{T_S}{m+m_{f_{k|k}}}\mu_{k|k}+1 & -\frac{T_S}{m+m_{f_{k|k}}}v_{k|k} & -\frac{T_s}{(m+m_{f_{k|k}})^2}(F_a(\hat{x}_{k|k}, I_k)-\mu_{k|k}v_{k|k}) \\ 0 & 0 & 1 & 0 \\ 0 & 0 & 0 & 1 \end{bmatrix}$$

And Q is a process covariance matrix made of 4 diagonal terms $q_{1,\ldots,4}>0$:

$$Q = \begin{bmatrix} q_1 & 0 & 0 & 0 \\ 0 & q_2 & 0 & 0 \\ 0 & 0 & q_3 & 0 \\ 0 & 0 & 0 & q_4 \end{bmatrix}$$

With the measurement covariance R>0 the correction gain L_{k+1}, the corrected estimate $\hat{X}_{k+1|k+1}$ and covariance matrix $P_{k+1|k+1}$ may be computed as:

$$L_{k+1}=P_{k+1|k}C^T(CP_{k+1|k}C^T+R)^{-1}$$

$$\hat{X}_{k+1|k+1}=\hat{X}_{k+1|k}+L_k(\hat{v}_{1_k}-v_{k+1|k})$$

$$P_{k+1|k+1}=\left(\begin{bmatrix}1&0&0&0\\0&1&0&0\\0&0&1&0\\0&0&0&1\end{bmatrix}-L_kC\right)P_{k+1|k}$$

The velocity observer block may be computed in various ways. For example, the velocity observer block may be computed as:

$$\widehat{v_{1_k}}=\frac{V_{in_k}-L(\hat{x}_k,I_k)\frac{dI}{dt}-RI_k}{E(\hat{x}_k,I_k)}$$

$$\frac{dI}{dt}$$

may be approximated by the 1st order finite difference method:

$$\frac{dI}{dt}=\frac{(I_k-I_{k-1})}{T_s}$$

Alternatively,

$$\frac{dI}{dt}$$

may be computed as:

$$\frac{\widehat{dI}}{dt}(kT_s)=-\frac{6}{(NT_s)^3}\sum_{i=0}^{N}w_i(NT_S-2iT_s)I(kT_s-iT_s)d\tau$$

N being an integer chosen so that $T=NT_s$,

$$w_0=w_N=\frac{T_s}{2}$$

and $w_i=T_s$, i=1, . . . N−1.

Alternatively, the velocity observer block may be computed using a set of nonlinear equations such as:

$$\hat{I}=\int\left(\frac{1}{L(\hat{x},I)}V-\frac{R}{L(\hat{x},I)}I-\hat{f}\right)dt$$

$$\hat{f}=(k_1+1)\left(\hat{I}-I+\int(\hat{I}-I)dt\right)+k_2\int\operatorname{sign}(\hat{I}-I)dt$$

$$\widehat{v_{1_k}}=\frac{L(\hat{x},I)}{E(\hat{x},I)}\hat{f}$$

Referring now to FIG. **36**, yet another exemplary sensorless multistage control of a controller constructed in accordance with the principles of the present invention is provided. As shown in FIG. **36**, the estimated position of the position observer may be used in the extended Kalman filter of FIG. **34**. Accordingly, the estimated velocity, position and parameters may be used in the control scheme of FIG. **36**.

While various illustrative embodiments of the invention are described above, it will be apparent to one skilled in the art that various changes and modifications may be made therein without departing from the invention. For example, pump assembly **70** shown in FIG. **9** may be ordered differently and may include additional or fewer components of various sizes and composition. The appended claims are intended to cover all such changes and modifications that fall within the true spirit and scope of the invention.

What is claimed:

1. An implantable blood pump system comprising:

an implantable blood pump configured to be implanted at a patient's heart, the implantable blood pump comprising:

a housing having an inlet and an outlet;

a deformable membrane disposed within the housing; and

an actuator comprising a stationary component and a moving component coupled to the deformable membrane, the actuator configured to be powered by an alternating current that causes the moving component to reciprocate at a predetermined frequency and amplitude relative to the stationary component, thereby causing the deformable membrane to produce a predetermined blood flow from the inlet out through the outlet; and

a controller operatively coupled to the implantable blood pump, the controller configured to be programmed to:

operate the actuator to cause the moving component to reciprocate at the predetermined frequency and amplitude relative to the stationary component;

receive a signal indicative of the alternating current via a current sensor operatively coupled to the controller;

determine a position of the moving component based on the signal indicative of the alternating current; and

adjust operation of the actuator to cause the moving component to reciprocate at an adjusted predetermined frequency and amplitude relative to the stationary component based on the position of the moving component, thereby causing the deformable membrane to produce an adjusted predetermined blood flow from the inlet out through the outlet.

2. The system of claim **1**, wherein the controller is programmed to determine the position of the moving component by estimating a velocity of the moving component based on the signal indicative of the alternating current.

3. The system of claim **2**, wherein the controller is programmed to estimate the velocity of the moving component based on co-energy W values of a finite elements model (FEM) of various positions and alternating currents of the moving component.

4. The system of claim **2**, wherein the controller is programmed to determine the position of the moving component by determining the velocity of the moving component based on the estimated velocity of the moving component.

5. The system of claim 1, wherein the controller is programmed to adjust operation of the actuator to cause the moving component to reciprocate at the adjusted predetermined frequency and amplitude relative to the stationary component while limiting overshoot.

6. The system of claim 5, wherein the controller comprises a PI controller configured to be programmed to limit overshoot by canceling errors due to un-modeled dynamics of the implantable blood pump.

7. The system of claim 1, wherein the controller is programmed to determine the position of the moving component based on the signal indicative of the alternating current and variations of inductance and back EMF coefficient.

8. The system of claim 1, wherein the adjusted predetermined blood flow comprises a pulse synchronized with the patient's heartbeat.

9. The system of claim 1, wherein the stationary component comprises an electromagnetic assembly configured to generate a magnetic field, and wherein the moving component comprises a magnetic ring concentrically suspended around the electromagnetic assembly and configured to reciprocate responsive to the magnetic field at the predetermined frequency and amplitude over the electromagnetic assembly.

10. The system of claim 9, wherein the electromagnetic assembly comprises first and second electromagnetic coils, and wherein the magnetic ring is caused to move when at least one of the first or second electromagnetic coils is powered by the alternating current.

11. The system of claim 9, wherein the magnetic ring is configured to induce wave-like deformations in the deformable membrane by reciprocating over the electromagnetic assembly.

12. The system of claim 1, further comprising first and second suspension rings concentrically disposed around and coupled to the stationary component and the moving component.

13. The system of claim 12, wherein the moving component is coupled to each of the deformable membrane and the first and second suspension rings via a plurality of posts.

14. The system of claim 12, wherein the first and second suspension rings permit the moving component to reciprocate relative to the stationary component.

15. The system of claim 12, wherein the first and second suspension rings exert a spring force on the moving component when the moving component reciprocates relative to the stationary component.

16. The system of claim 1, further comprising a rigid ring coupled to the moving component, the rigid ring further coupled to the deformable membrane.

17. The system of claim 1, wherein a bottom surface of the actuator and an interior portion of the housing adjacent the outlet forms a flow channel within which the deformable membrane is suspended.

18. The system of claim 17, wherein the deformable membrane comprises a central aperture adjacent the outlet.

19. The system of claim 17, wherein the actuator and an interior surface of the housing adjacent the inlet forms a delivery channel extending from the inlet to the flow channel.

20. The system of claim 1, further comprising a rechargeable battery configured to deliver the alternating current to power the implantable blood pump.

21. An implantable blood pump system comprising:

an implantable blood pump configured to be implanted at a patient's heart, the implantable blood pump comprising:

a housing having an inlet and an outlet;

a deformable membrane disposed within the housing; and

an actuator comprising a stationary component and a moving component coupled to the deformable membrane, the actuator configured to cause the moving component to reciprocate at a predetermined frequency and amplitude relative to the stationary component, thereby causing the deformable membrane to produce a predetermined blood flow from the inlet out through the outlet; and

a controller operatively coupled to the implantable blood pump, the controller configured to be programmed to:

operate the actuator to cause the moving component to reciprocate at the predetermined frequency and amplitude relative to the stationary component;

receive a signal indicative of an intensity of a magnetic field of a magnet coupled to the moving component via a sensor operatively coupled to the controller, the sensor stationary relative to the stationary component;

determine a position of the moving component based on the signal indicative of the intensity of the magnetic field; and

adjust operation of the actuator to cause the moving component to reciprocate at an adjusted predetermined frequency and amplitude relative to the stationary component based on the position of the moving component, thereby causing the deformable membrane to produce an adjusted predetermined blood flow from the inlet out through the outlet.

22. The system of claim 21, wherein the sensor comprises a hall effector sensor.

23. The system of claim 21, wherein the sensor is coupled to the stationary component.

24. The system of claim 21, wherein the sensor is coupled to the housing.

25. The system of claim 21, wherein the controller is further configured to be programmed to estimate blood flow from the inlet out through the outlet based on the position of the moving component.

26. The system of claim 21, wherein the controller is further configured to be programmed to detect a fault by comparing an average residual value based on the position of the moving component with a predetermined threshold value.

27. An implantable blood pump system comprising:

an implantable blood pump configured to be implanted at a patient's heart, the implantable blood pump comprising:

a housing having an inlet and an outlet;

a deformable membrane disposed within the housing; and

an actuator comprising a stationary component and a moving component coupled to the deformable membrane, the actuator configured to cause the moving component to reciprocate at a predetermined frequency and amplitude relative to the stationary component, thereby causing the deformable membrane to produce a predetermined blood flow from the inlet out through the outlet; and

a controller operatively coupled to the implantable blood pump, the controller configured to be programmed to:

operate the actuator to cause the moving component to reciprocate at the predetermined frequency and amplitude relative to the stationary component;

receive a signal indicative of an intensity of a magnetic field of a magnet coupled to the moving component via a sensor operatively coupled to the controller, the sensor stationary relative to the stationary component;

estimate a velocity of the moving component based on the signal indicative of the intensity of the magnetic field; and

adjust operation of the actuator to cause the moving component to reciprocate at an adjusted predetermined frequency and amplitude relative to the stationary component based on the velocity of the moving component, thereby causing the deformable membrane to produce an adjusted predetermined blood flow from the inlet out through the outlet.

* * * * *