Science Arts & Métiers (SAM)
is an open access repository that collects the work of Arts et Métiers Institute of Technology researchers and makes it freely available over the web where possible.

This is an author-deposited version published in: https://sam.ensam.eu
Handle ID: .http://hdl.handle.net/10985/10109

To cite this version :

Fessal KPEKY, Hakim BOUDAOUD, El Mostafa DAYA, Hocine CHALAL, Farid ABED-MERAIM - Vibration modeling of sandwich structures using solid-shell finite elements - In: 11th World Congress on Computational Mechanics, WCCM 2014, the 5th European Conference on Computational Mechanics, ECCM 2014 and the 6th European Conference on Computational Fluid Dynamics, ECFD 2014, Espagne, 2014-07-20 - World Congress on Computational Mechanics; 5th European Conference - 2014

Any correspondence concerning this service should be sent to the repository Administrator : scienceouverte@ensam.eu

VIBRATION MODELING OF SANDWICH STRUCTURES USING SOLID-SHELL FINITE ELEMENTS

F. KPEKY[*], H. BOUDAOUD[*], H. CHALAL[†], F. ABED-MERAIM[†] AND E.M. DAYA[*,‡]

[*] Laboratoire d'Etude des Microstructures et de Mécanique des Matériaux (LEM3)
Université de Lorraine
Ile du Saulcy, 57045 Metz, Cedex 1, France
email: fessal.kpeky@univ-lorraine.fr, hakim.boudaoud@univ-lorraine.fr,
el-mostafa.daya@univ-lorraine.fr, www.lem3.fr

[†] Laboratoire d'Etude des Microstructures et de Mécanique des Matériaux (LEM3)
Arts et Métiers ParisTech, Campus de Metz
4 rue A. Fresnel, 57078 Metz, Cedex 03, France
email: hocine.chalal@ensam.eu, farid.abed-meraim@ensam.eu, www.lem3.fr

[‡] Laboratory of Excellence on Design of Alloy Metals for low-mAss Structures (DAMAS)

Key Words: *Finite elements, Solid-Shell, Vibrations, Sandwich structures.*

Abstract. The aim of this work is to propose a new finite element modeling for vibration of sandwich structures with soft core. Indeed, several approaches have been adopted in the literature to accurately model these types of structures, but show some limitations in certain configurations of high contrast of material properties or geometric aspect ratios between the different layers. In these situations, it is generally well-known that the use of higher-order or three-dimensional finite elements is more appropriate, but will generate a large number of degrees of freedom, and thereby, large CPU times. In this work, an alternative method is followed by considering the linear hexahedral solid-shell element previously developed by Abed-Meraim and Combescure [1]. This element is implemented into the commercial software ABAQUS via a User Element (UEL) subroutine. Numerical tests on various cantilever sandwich beams are performed to show the efficiency of this approach.

1 INTRODUCTION

Problems involving vibration occur in many areas of mechanical, civil and aerospace engineering. These vibrations are undesirable because they lead to noise and system dysfunction. An efficient passive solution to reduce vibrations is the use of sandwich structures with elastic faces and viscoelastic core [2,3].

Various kinematic models and numerical methods have been devoted to determine accurately the damping properties of viscoelastic sandwich structures under vibration. Hu et al. [3] have presented a review and assessment of existing models. Indeed, earlier classical

theories of laminated thin shell and plate approximations are based on the Kirchhoff–Love model. With these approaches, the deformation due to shear is neglected as compared to other strains. Then Reissner [4] and Mindlin [5] established first order theories that take into account this shear deformation. However, these studies have shown that the deformation varies at least in a quadratic form with the shear stress zero on the outer surfaces of the skins. Subsequent studies, Reddy [6] and Touratier [7] (to name only these), have made major contributions by proposing higher-order theories of the displacement field in the thickness (cubic and sinusoidal, respectively). The major advantage of these is to allow a parabolic description of the shear stress while ensuring the condition of zero shear stress on the free surface of the sandwich structures.

All of these studies provide estimates of the accuracy, under various loads, of the overall stiffness, frequencies, loss factor and many other properties. However, the sandwich structure is treated as a single layer to facilitate analysis. Unfortunately, this assumption does not correctly describe some phenomena in a structure exhibiting high contrast of stiffness between different layers. To compensate these shortcomings, zigzag theories assuming continuity (IC-ZZT) or not (ID-ZZT) have been developed. These theories describe layer-by-layer the displacement field ensuring continuity conditions of the displacement field imposed at the interfaces between the core and the faces (see, e.g., Boudaoud et al. [8], Bilasse et al. [9], Abdoun et al. [10]).

These models have shown their limitations and an alternative approach could be the use of three-dimensional finite element assemblies, but this generally leads to a large number of degrees of freedom. Another approach proposed in this work can be the use of a solid-shell element based on a fully three-dimensional formulation. Such a solid-shell element has been developed in order to correctly take into account the through-thickness phenomena, while maintaining the CPU time at reasonable levels [1,11,12]. This is a linear isoparametric hexahedral element having only nodal displacements as degrees of freedom and provided with a set of integration points distributed along the thickness direction. To avoid locking phenomena, the fully three-dimensional elastic constitutive matrix was also modified in order to approach shell-like behavior. To eliminate the zero-energy hourglass modes due to the reduced integration, an effective stabilization technique was used following the “Assumed Strain” method of Belytschko and Bindeman [13]. Several benchmark tests were analyzed to show the effectiveness of this solid-shell element in linear and non-linear problems. Recently, Salahouelhadj et al. [14] successfully simulated sheet metal forming processes using the SHB8PS solid-shell element coupled with an anisotropic large strain elastic-plastic model.

The purpose of the current work is to combine this solid-shell concept with sandwich structure modeling in order to evaluate its capabilities in analyzing vibration of sandwich structures. A number of representative applications will be shown.

2 FORMULATION OF THE PROBLEM

In this work, we consider the free vibration problem of sandwich structures with soft core pictured in Figure 1.

The basic equilibrium equations are obtained by using the virtual work principle as follows:

$$\delta P_{acc} = \delta P_{ext} + \delta P_{int} \tag{1}$$

where δP_{acc} is the virtual work associated with the kinetic energy, and δP_{ext} and δP_{int} represent the virtual work of external loads and internal forces, respectively, for each layer.

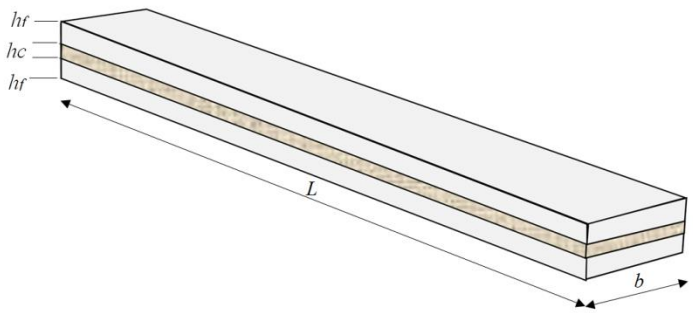

Figure 1: Sandwich beam structure

One can show that Eq. (1) may be transformed into Eq. (2) to obtain the vibration eigenmodes, frequencies and equivalent loss factors:

$$\left(\left[K_e(\omega)\right] - \omega^2\left[M_e\right]\right)\left\{U_e\right\} = 0 \tag{2}$$

where $[M_e]$ and $[K_e]$ denote the element mass and stiffness matrices, respectively. Note that $[K_e]$ is more detailed in [1,11,12,14] and $[M_e]$ is identical to that of a standard linear brick element.

Unlike models in the literature of sandwich structures, we propose in this work a new finite element method to solve (2) for any geometrical and material configurations of the sandwich structures. To achieve this goal, the formulation of the SHB8PS solid-shell element is considered. More details of this kind of element can be found in [1,11,12,14]. As mentioned above, this is an eight-node hexahedral element with only displacement degrees of freedom. The associated integration points are arranged in a preferred direction (thickness) in the local coordinate frame (Figure 2). The classical plane-stress constitutive law, usually adopted in shell formulations, has been amended to take into account shear and membrane effects. Accordingly, the resulting elasticity matrix C^{ele} is expressed in this local coordinate frame in terms of the Young modulus E and the Poisson ratio ν as follows:

$$\underline{\underline{\mathbf{C}}}^{ele} = \begin{bmatrix} \bar{\lambda}+2\mu & \bar{\lambda} & 0 & 0 & 0 & 0 \\ \bar{\lambda} & \bar{\lambda}+2\mu & 0 & 0 & 0 & 0 \\ 0 & 0 & E & 0 & 0 & 0 \\ 0 & 0 & 0 & \mu & 0 & 0 \\ 0 & 0 & 0 & 0 & \mu & 0 \\ 0 & 0 & 0 & 0 & 0 & \mu \end{bmatrix} \quad \text{with} \quad \bar{\lambda} = \frac{E\nu}{1-\nu^2} \quad \text{and} \quad \mu = \frac{E}{2.(1+\nu)} \tag{3}$$

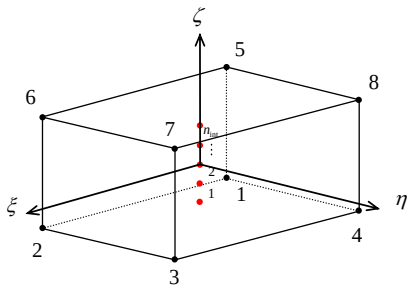

Figure 2: Reference element geometry and integration points

3 NUMERICAL TESTS

3.1 Validation of the present model

Numerical analyses of a cantilever sandwich beam are first performed in order to validate the present model. Natural frequencies are computed, and the geometric and material properties considered in this preliminary study are reported in Table 1.

The results of the SHB8PS element are compared with those of the Abaqus eight-node reduced integration element C3D8R and listed in Table 2.

Table 1: Geometric and material properties

E	ν	ρ	L	h	b
2.1E11 Pa	0.3	7800 kg.m^{-3}	1 m	0.01 m	0.1 m

Table 2: Eigen frequencies of the cantilever beam

Element type	Mesh layout	$f_{1\,ref} = 8.4$	$f_{2\,ref} = 52.5$	$f_{3\,ref} = 83.8$	$f_{4\,ref} = 147.1$
		f_1/f_{1ref}	f_2/f_{2ref}	f_3/f_{3ref}	f_4/f_{4ref}
C3D8R	(30x3x1)=90	0.10	0.10	0.18	0.20
	(40x4x1)=160	0.10	0.10	0.18	0.20
	(80x8x1)=640	0.10	0.10	0.18	0.19
	(30x3x4)=360	0.94	0.97	0.94	0.97
	(40x4x4)= 640	0.98	0.98	0.96	0.98
	(80x8x4)=2560	0.98	0.98	0.99	0.99
	(30x3x5)=450	0.98	0.99	0.94	0.99
	(40x4x5)=800	0.99	0.99	0.96	1.00
	(80x8x5)=3200	1.00	1.00	0.99	1.00
SHB8PS (2 Integration Points)	(30x3x1)=90	1.00	1.01	1.00	1.01
	(40x4x1)=160	1.00	1.01	1.00	1.01

3.2 Vibration analysis of sandwich beams

In order to evaluate the solid-shell performance, finite element (FE) analyses of various cantilever sandwich beams have been performed using the FE code Abaqus/Standard. The results obtained with the SHB8PS element are compared to those given by other Abaqus formulations, namely a continuum plane-strain quadratic element CPE8R, a three-dimensional hexahedral quadratic element C3D20R, and a 3D hexahedral linear full-integration C3D8 element. The results are also compared to those yielded by a 2D FE code of FSDT IC-ZZT developed in Matlab. The SHB8PS element has been implemented through an UEL subroutine. The sandwich beam consists of two face sheets made of aluminum and a core (Figure 2) whose mechanical and geometric properties are given in Table 3.

Table 3: Sandwich beam parameters

E_f	ρ_f	ρ_c	h	ν_f	ν_c
6.9E10 Pa	2766 kg.m^{-3}	1600 kg.m^{-3}	0.05 m	0.3	0.49

Three dimensionless beam parameters are used in this comparative study, namely, the ratio of core to face Young modulus (*Ec*/*Ef*), the ratio of beam length to beam total thickness (*L*/*h*), and the ratio of core to skin thickness (*hc*/*hf*). Let us remark that under these considerations and by using material parameters as listed in Table 1, all sandwich beam possible configurations can be represented. For these purposes, eigen frequencies evaluations are made in three configurations:

Case 1. Thin/thick core: $0.1 \le hc/hf \le 100$ $\quad (L/h = 20\ ;\ \ Ec/Ef = 2\cdot 10^{-5})$

Case 2. Short/long beam: $4 \le L/h \le 100$ $\quad (hc/hf = 1\ ;\ \ Ec/Ef = 2\cdot 10^{-5})$

Case 3. Soft/rigid core: $0.0001 \leq Ec/Ef \leq 100 \quad (hc/hf = 1 \; ; \quad L/h = 20)$

The results of these cases are shown in Tables 4, 5, and 6, by providing the first eigen frequencies corresponding to different formulations, where NDOF and NIP denote the number of degrees of freedom per layer and the number of integration points per element, respectively. It appears from all of these tables that the solid-shell element formulation gives accurate results for the different configurations within reasonable CPU times.

Table 4: Influence of *hc*/*hf* (*L*/*h* = 20, *Ec*/*Ef* = 2.10^{-5})

	SHB8PS	C3D8	C3D20R	CPE8R	FSDT IC-ZZT
NDOF/layer	2160	384000	48000	4320	3000
NIP/element	2	8	8	4	-
$\frac{h_c}{h_f} = 0.1$	21.186	21.140	21.205	21.205	21.505
	125.96	125.30	125.73	125.73	121.90
	349.99	346.24	347.46	347.46	335.25
$\frac{h_c}{h_f} = 1$	13.006	13.146	13.015	13.015	13.032
	78.581	79.279	78.433	78.433	75.634
	219.38	220.12	217.73	217.73	209.08
$\frac{h_c}{h_f} = 40$	3.0638	3.3325	3.0640	3.0640	4.2148
	9.3719	10.868	9.3607	9.3607	12.794
	16.256	20.835	16.193	16.193	21.958
$\frac{h_c}{h_f} = 100$	2.9512	3.1409	2.9506	2.9506	4.0496
	8.900	9.8452	8.8891	8.8891	12.249
	15.134	17.798	15.086	15.086	21.108

Table 5: Influence of *L*/*h* (*hc*/*hf* = 1, *Ec*/*Ef* = 2.10^{-5})

	SHB8PS	C3D8	C3D20R	CPE8R	FSDT IC-ZZT
NDOF/layer	2160	384000	48000	4320	3000
NIP/element	2	8	8	4	-
$\frac{L}{h} = 4$	309.43	310.73	300.82	309.06	297.27
	1884.0	1772.1	1735.2	1792.0	1857.1
$\frac{L}{h} = 10$	47.823	50.224	48.509	50.294	48.636
	290.22	309.55	298.34	309.97	298.34
$\frac{L}{h} = 40$	3.6378	4.2195	3.6397	3.6399	0.4538
	20.157	24.134	20.118	20.120	1.0208
$\frac{L}{h} = 100$	0.83588	1.2253	0.83612	0.83617	0.2432
	3.6786	6.6111	3.6721	3.6724	0.4240

Table 6: Influence of *Ec*/*Ef* (*hc*/*hf* = 1, *L*/*h* = 20)

	SHB8PS	C3D8	C3D20R	CPE8R	FSDT IC-ZZT
NDOF/layer	2160	384000	48000	4320	3000
NIP/element	2	8	8	4	-
$\frac{E_c}{E_f}=10^{-4}$	16.939 84.161 224.48	16.908 83.718 222.11	16.947 84.011 222.97	16.947 84.011 222.97	16.815 81.328 214.41
$\frac{E_c}{E_f}=0.1$	44.397 263.24 684.75	44.468 262.97 681.10	44.440 262.79 680.59	44.440 262.79 680.59	42.675 260.79 703.46
$\frac{E_c}{E_f}=100$	105.91 662.01 1847.8	102.96 642.25 1786.1	106.71 665.74 1851.6	106.71 665.74 1851.6	125.88 788.19 2203.9

5 CONCLUSIONS

An efficient analysis of sandwich beam vibrations has been proposed using a solid-shell formulation. The presented results show the interest in adopting solid-shell elements in this type of applications. The study can be extended to the modeling of multilayer structures using a single element with the possibility of assigning various material responses at different integration points.

REFERENCES

[1] Abed-Meraim, F. and Combescure, A. SHB8PS—a new adaptive assumed-strain continuum mechanics shell element for impact analysis. *Comput. Struct*. (2002) **80**:791-803.

[2] Daya, E.M. and Potier-Ferry, M. A numerical method for nonlinear eigenvalue problems application to vibrations of viscoelastic structures. *Comput. Struct*. (2001) **79**:533-541.

[3] Hu, H., Belouettar, S., Potier-Ferry, M. and Daya, E.M. Review and assessment of various theories for modeling sandwich composites. *Compos. Struct*. (2008) **84**:282-292.

[4] Reissner, E. The effect of transverse shear of transverse shear deformation on the bending of elastic plates. *J. Appl. Mech*. (1945) **12**:69-75.

[5] Mindlin, R.D. Influence of rotatory inertia and shear in flexural motions of isotropic elastic plates. *J. Appl. Mech*. (1951) **18**:1031-1036.

[6] Reddy, J.N. A simple higher-order theory of laminated composite plate. *J. Appl. Mech*. (1984) **51**:745-752.

[7] Touratier, M. An efficient standard plate theory. *Int. J. Eng. Sci*. (1991) **29**:901-916.

[8] Boudaoud, H., Daya, E.M., Belouettar, S., Duigou, L. and Potier-Ferry, M. Damping analysis of beams submitted to passive and active control. *Eng. Struct*. (2009) **31**:322-331.

[9] Bilasse, M., Daya, E.M. and Azrar, L. Linear and nonlinear vibrations analysis of viscoelastic sandwich beams. *J. Sound Vib*. (2010) **329**:4950-4969.

[10] Abdoun, F., Azrar, L., Daya, E.M. and Potier-Ferry, M. Forced harmonic response of viscoelastic structures by an asymptotic numerical method. *Comput. Struct*. (2009) **87**:91-100.

[11] Abed-Meraim, F. and Combescure, A. An improved assumed-strain solid-shell element formulation with physical stabilization for geometric nonlinear applications and elastic-plastic stability analysis. *Int. J. Numer. Meth. Eng.* (2009) **80**:1640-1686.

[12] Legay, A. and Combescure, A. Elastoplastic stability analysis of shells using the physically stabilized finite element SHB8PS. *Int. J. Numer. Meth. Eng.* (2003) **57**:1299-1322.

[13] Belytschko, T. and Bindeman, L.P. Assumed strain stabilization of the eight node hexahedral element. *Comput. Meth. App. Mech. Eng*. (1993) **105**:225-260.

[14] Salahouelhadj, A., Abed-Meraim, F., Chalal, H. and Balan, T. Application of the continuum shell finite element SHB8PS to sheet forming simulation using an extended large strain anisotropic elastic–plastic formulation. *Arch. Appl. Mech.* (2012) **82**:1269-1290.