Science Arts & Métiers (SAM)
is an open access repository that collects the work of Arts et Métiers Institute of Technology researchers and makes it freely available over the web where possible.

This is an author-deposited version published in: https://sam.ensam.eu
Handle ID: .http://hdl.handle.net/10985/8504

To cite this version :

Marco MONTEMURRO, Anita CATAPANO - Optimal design of sandwich plates with honeycomb core - In: Joint Conference on Mechanical, Design Engineering & Advanced Manufacturing, France, 2014-06-19 - Proceedings of Joint Conference on Mechanical, Design Engineering & Advanced Manufacturing - 2014

Any correspondence concerning this service should be sent to the repository Administrator : scienceouverte@ensam.eu

OPTIMAL DESIGN OF SANDWICH PLATES WITH HONEYCOMB CORE

A. Catapano [1], M. Montemurro [2]

(1) : Université de Bordeaux, I2M CNRS UMR 5295, F-33400 Talence, France
+33 (0) 5 56 84 54 22 / +33 (0) 5 40 00 69 64
E-mail : anita.catapano@ipb.fr

(2) : Arts et Métiers ParisTech, I2M CNRS UMR 5295, F-33400 Talence, France
+33 (0) 5 56 84 54 22 / +33 (0) 5 40 00 69 64
E-mail : marco.montemurro@ensam.eu

Abstract: This work deals with the problem of the optimum design of a sandwich structure composed of two laminated skins and a honeycomb core. The goal is to propose a numerical optimisation procedure that does not make any simplifying hypothesis in order to obtain a true global optimal solution for the considered problem. In order to face the design of the sandwich structure at both meso and macro scales, we use a two-level optimisation strategy. At the first level, we determine the optimum geometry of the unit cell together with the material and geometric parameters of the laminated skins, while at the second level we determine the optimal skins lay-up giving the geometrical and material parameters issued from the first level. We will illustrate the application of our strategy to the least-weight design of a sandwich plate submitted to several constraints: on the first buckling load, on the positive-definiteness of the stiffness tensor of the core, on the ratio between skins and core thickness and on the admissible moduli for the laminated skins.

Key words: Honeycomb, homogenisation, optimisation, sandwich panels, genetic algorithm.

1- Introduction

One of the most important challenges for automotive, naval and aerospace industries is the reduction of the weight of structures. Due to their high stiffness-to-weight ratio, sandwich structures are widely used in several fields: aviation, automotive, naval, construction, industry, and so on. Their application, in fact, ranges from the most performing structures such as aircraft wings, helicopters rotor blades, racing yachts keels to home furnishings.

The main characteristic of a sandwich structure concerns the presence of a low-density cellular solid, i.e. the core, between two stiffer thin plates, that increases the geometric moment of inertia of the plate with a few increment of weight. We can identify, in addition, several types of sandwich structures according to the geometry and shape of the core: honeycomb, solid, foam, corrugated, truss, web cores, and so on. The most important feature of the core is the relative density (ratio between the density of the cellular material and that of the material from which the cells walls are made) that can generally vary from 0.001 to 0.4, see [GA1]. Almost any material can be used to build a cellular solid: polymers, metals, ceramics, composites and so on. Sandwich panels, in aircraft applications, are composed by glass or carbon-fibre composite skins separated by aluminium or resin honeycombs, or by polymer foams. In particular, the honeycomb cell size can be chosen to provide cores with different stiffness and density properties. The result is a panel with very high bending stiffness-to-weight and strength-to-weight ratios. A review on sandwich structures and their applications can be found in [GA1, V3, V5].

The optimal design of sandwich structures is much more cumbersome than that of a classical monolithic structure. The difficulties increase when the sandwich structure is made of composite skins and a honeycomb core. In this case, we have to face, into the same design process, both the difficulty of designing a laminated plate (concerning the skins) and the difficulty of designing a complex 3D cellular continuum such as the honeycomb core. Therefore, the engineers always use some simplifying assumptions or rules to obtain, in an easier and faster way, a solution. For example, in [A1, HA1] the optimal design of a sandwich plate is addressed determining exclusively the optimum thickness of both the core and the skins, keeping constant the rest of geometric and material parameters describing their behaviour.

The problem of designing a sandwich panel can be formulated as an optimisation problem. However, unlike what is usually done in literature, our objective is twofold: on one hand, we want to formulate and solve such a problem on different scales and on the other hand, we want to include within the design process all the possible parameters defining the structure (at each scale) as optimisation variables. Therefore, in the framework of the design of a sandwich

panel with honeycomb core and composite skins, we will consider, as optimisation variables, both their geometric and material constitutive parameters at each scale.

To this purpose, we propose a very general design strategy that consists in a numerical optimisation procedure that we set free from any simplifying hypothesis to obtain a true optimal configuration of the system. The design process that we propose is not submitted to restrictions: any parameter characterising our structure is an optimisation variable (thickness of the core, number of plies of skins, plies orientations, geometry of the unit cell).

In order to deal with the design problem of the sandwich plate at both meso and macro scales, we used a two-level optimisation strategy. At the first level we determine the optimum geometry of the unit cell (core meso-scale) together with the material and geometric parameters of the laminated skins (at this level the laminate representing each skin is modelled as an equivalent homogeneous anisotropic plate whose behaviour at the macro-scale is described in terms of the laminate polar parameters, see [V4]). At the second level of the strategy, we determine the optimal skins lay-up (the skin meso-scale) that satisfies the optimal combination of material and geometrical parameters issued from the first level of the strategy. The whole strategy is based on the use of the polar formalism [V1, V2, V4] and on the Genetic Algorithm (GA) BIANCA [M1, MV1, MV2] and it can be easily generalised to other problems.

The paper is organised as follows: the mechanical problem considered in the study as well as the two-level strategy are introduced in Section 2. The mathematical formulation of the first-level problem is detailed in Section 3 and the problem of determining a suitable laminate is formulated in Section 4. A concise description of the Finite Element (FE) model of the sandwich structure at both meso and macro scales is given in Section 5, while in Section 6 we show some numerical results to prove the effectiveness of the optimisation strategy. Finally, Section 7 ends the paper with some concluding remarks and perspectives.

2- Optimum design of sandwich panels with honeycomb core

2.1 – Problem description

The optimisation procedure presented in this work is applied to a sandwich plate composed by two laminated skins and a honeycomb core with hexagonal cells, see Fig. 1.

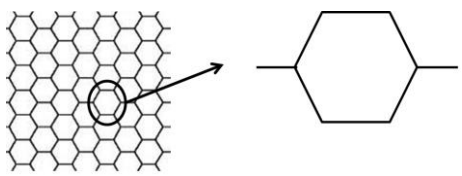

Figure 1. Honeycomb core and the repetitive unit cell.

The skins are made of carbon-epoxy unidirectional orthotropic plies, while the honeycomb core is obtained from aluminium alloy foils whose material properties are listed in Table 1.

Concerning the honeycomb core, the basic classical assumptions used to evaluate its elastic response and, hence, to determine its effective material properties (at the macro-scale) are:

- linear, elastic behaviour for the material of the cell walls;
- perfect bonding for the wall-to-wall contact;
- buckling of the cell walls disregarded.

Concerning the mechanical behaviour (at the macro-scale) of the two laminated skins they are modelled as quasi-homogeneous, fully orthotropic laminates, see Section 3.

Material properties of the aluminium		
E [MPa]	ν	ρ [Kg/mm^3]
70 000	0.33	2.7 x 10^{-6}
Material properties of the carbon-epoxy		
E_1 [MPa]	E_2 [MPa]	E_3 [MPa]
181 000	10 300	10 300
G_{12} [MPa]	G_{23} [MPa]	G_{13} [MPa]
7 170	3 843	7 170
ν_{12}	ν_{23}	ν_{13}
0.28	0.34	0.28
ρ_s [Kg/mm^3]	1.58 x 10^{-6}	

Table 1. Material properties of the aluminium foils and of the carbon-epoxy plies.

In addition, no simplifying hypotheses are made on the geometric and mechanical parameters of both the skins and the core, i.e. any parameter characterising our structure is an optimisation variable: geometry of the unit cell as well as number and orientation of the plies for the skins. Only avoiding the use of *a priori* assumptions one can hope to obtain the true global optimum for a given problem: this is a key-point in our approach.

2.2 – Description of the two-level strategy

The goal of our problem is the minimisation of the weight of the sandwich plate subject to mechanical constraints on the first buckling load, on the positive-definiteness of the stiffness tensor of the core and on the admissible moduli for the laminated skins together with geometrical constraints on the ratio between skins and core thickness. The optimisation strategy is articulated into two distinct problems as described here below.

First-level problem. The aim of this phase is the determination of the optimal geometry of the unit cell together with the material and geometric parameters of the

laminated skins in order to minimise the weight of the entire structure. At this level the laminate representing each skin is modelled as an equivalent homogeneous anisotropic plate whose behaviour at the macro-scale is described in terms of the laminate polar parameters, see [V1, M1, MV1], by means of the classical stiffness tensors **A**, **B** and **D**. It is worth noting that, concerning the model of the core, the first level of the strategy involves two different scales:

- the meso-scale wherein the core is modelled via the single unit cell characterised by its geometric variables;
- the macro-scale where the core is modelled as an homogeneous orthotropic solid whose mechanical response is described through the full set of elastic moduli that depend on the geometric parameters of the unit cell.

Therefore, the link between these two scales is represented by the homogenisation phase of the honeycomb core that leads us to represent the core, at the macro-scale level, as a homogeneous continuum characterised by its equivalent material properties, namely $E_1^c, E_2^c, E_3^c, G_{12}^c, G_{13}^c, G_{23}^c, \nu_{12}^c, \nu_{13}^c, \nu_{23}^c$. This last aspect has led us to search an accurate method to determine the material properties of the orthotropic core that will be assigned to the equivalent solid at the macro-scale.

Second-level problem. At the second level of the strategy, we have to determine the optimal skins lay-up (the skin meso-scale) that satisfies the optimal combination of their material and geometrical parameters issued from the first level of the strategy. The goal of this phase is, hence, to find at least one stacking sequence, for each skin, which has to be quasi-homogeneous, fully orthotropic and has to meet the optimal polar parameters issued from the first step. At this level of the strategy, the design variables are the layers orientations.

3- Formulation of the first level problem

3.1 – Optimisation variables

In this phase, we have to determine the optimal values of the following parameters:

- the thickness of both top and bottom skins, h_t and h_b respectively;
- the mechanical properties of each skin, namely the anisotropic polar parameters of the plate ($\left(R_{0K}^{A*}\right)_t$, $\left(R_1^{A*}\right)_t$ and $\left(\Phi_1^{A*}\right)_t$ for the top skin and $\left(R_{0K}^{A*}\right)_b$, $\left(R_1^{A*}\right)_b$ and $\left(\Phi_1^{A*}\right)_b$ for the bottom skin);
- the thickness of the core h_c;
- the geometrical properties of the unit cell of the honeycomb core (l_1, l_2, t_c and ϑ), see Fig. 2;

We also remark that at this level of the optimisation procedure, the thickness h_t and h_b of the laminated skins are considered as discrete optimisation variables, the discretisation step being equal to the thickness of the elementary ply employed for the

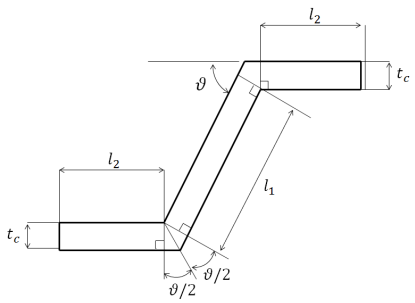

Figure 2. Geometrical parameters of the unit cell.

fabrication of the laminate, i.e. $\Delta h_t = \Delta h_b = 0.125$ mm. This assumption responds to a technological constraint and, in addition, the optimal value of these parameters will give us the optimal number of layers n to be used during the second-level problem.

Concerning the mechanical variables, we use the polar formalism, which gives a representation of any planar tensor by means of a complete set of tensor invariants. A great advantage in the design of anisotropic structures is that the polar parameters are directly linked to the different symmetries of the tensor, see [V1, V2, V4]. Using the polar formalism, the representation of the reduced stiffness tensor $\boldsymbol{Q}$ of the orthotropic lamina is:

$$\begin{aligned}
Q_{xxxx} &= T_0 + 2T_1 + (-1)^K R_0 \cos 4\Phi_1 + 4R_1 \cos 2\Phi_1 \\
Q_{xxyy} &= -T_0 + 2T_1 - (-1)^K R_0 \cos 4\Phi_1 \\
Q_{xxxy} &= (-1)^K R_0 \sin 4\Phi_1 + 2R_1 \sin 2\Phi_1 \\
Q_{yyyy} &= T_0 + 2T_1 + (-1)^K R_0 \cos 4\Phi_1 - 4R_1 \cos 2\Phi_1 \\
Q_{yyxy} &= -(-1)^K R_0 \sin 4\Phi_1 + 2R_1 \sin 2\Phi_1 \\
Q_{xyxy} &= T_0 - (-1)^K R_0 \cos 4\Phi_1
\end{aligned} \qquad \textbf{(1)}$$

where T_0, T_1, R_0, R_1 and K are the polar tensor invariants. T_0 and T_1 represent the isotropic moduli, R_0 and R_1 are the anisotropic ones, K is the shape orthotropy parameter (that can get the values 0 or 1), whilst Φ_1 is the polar angle that gives the othotropy orientation with respect to the global frame $\{0; x,y,z\}$.

The constitutive law of a laminate in the framework of the Classical Laminate Plate Theory (CLPT) is:

$$\begin{Bmatrix} \mathbf{N} \\ \mathbf{M} \end{Bmatrix} = \begin{bmatrix} \mathbf{A} & \mathbf{B} \\ \mathbf{B} & \mathbf{D} \end{bmatrix} \begin{Bmatrix} \boldsymbol{\varepsilon} \\ \boldsymbol{\chi} \end{Bmatrix} \qquad \textbf{(2)}$$

where **N** and **M** are the tensors representing the membrane forces and the bending moments , respectively. $\boldsymbol{\varepsilon}$ and $\boldsymbol{\chi}$ are the second-order tensors of in-plane strains and curvature of the laminate middle plane, whilst **A**, **D** and **B** are the fourth-order tensors of membrane, bending and coupling stiffness, respectively.

In addition, even the laminate stiffness tensors can be expressed through the polar formalism, see [V1]. Here we want to highlight that, for a laminate with identical plies, thanks to quasi-homogeneity assumption and to the polar formalism, we are able to reduce the number of polar

parameters describing the mechanical response of the laminate, see [MV1]. In fact, they reduce from 18 to only three for each skin: the anisotropic polar moduli, i.e. R_{0K}^{A*} and R_1^{A*}, and the polar angle Φ_1^{A*}. Moreover, in the formulation of the optimisation problem for the first level of the strategy, we have also to consider the geometric and feasibility constraints on the polar parameters ensuring, in this way, that the polar parameters issued from the optimisation correspond to a feasible laminate that will be designed during the second step of the strategy. For more details about these aspects, the reader is addressed to [V2].

3.2 – Mathematical statement of the optimisation problem

As previously said, the aim of the first level optimisation is the weight minimisation of the sandwich panel satisfying, simultaneously, constraints of different nature.
The design variables of the problem can be grouped into the following vector:

$$\mathbf{x} = \left\{\vartheta, t_c, l_2, l_1, h_c, \left(R_{0K}^{A*}\right)_t, \left(R_1^{A*}\right)_t, \left(\Phi_1^{A*}\right)_t, h_t, \ldots \right.$$
$$\left. \ldots \left(R_{0K}^{A*}\right)_b, \left(R_1^{A*}\right)_b, \left(\Phi_1^{A*}\right)_b, h_b \right\} \qquad \textbf{(3)}$$

The optimisation problem can now be formulated as follows:

$$\begin{gathered}
\min_{\mathbf{x}} \; W(\mathbf{x}) \\
\text{subject to:} \\
\lambda_{\text{ref}} - \lambda(\mathbf{x}) \le 0 \\
\frac{x_9}{x_5} - \alpha \le 0 \\
\frac{x_{13}}{x_5} - \alpha \le 0 \\
2\left(\frac{x_7}{R_1}\right)^2 - 1 - \frac{x_6}{R_0} \le 0 \\
2\left(\frac{x_{11}}{R_1}\right)^2 - 1 - \frac{x_{10}}{R_0} \le 0 \\
-E_1^c < 0 \\
-E_2^c < 0 \\
-E_3^c < 0 \\
-G_{12}^c < 0 \\
-G_{13}^c < 0 \\
-G_{23}^c < 0 \\
\left|\nu_{12}^c\right| - \sqrt{\frac{E_1^c}{E_2^c}} < 0 \\
\left|\nu_{13}^c\right| - \sqrt{\frac{E_1^c}{E_3^c}} < 0 \\
\left|\nu_{23}^c\right| - \sqrt{\frac{E_2^c}{E_3^c}} < 0 \\
2\nu_{12}^c \nu_{13}^c \nu_{23}^c \frac{E_3^c}{E_1^c} + \left(\nu_{12}^c\right)^2 \frac{E_2^c}{E_1^c} + \left(\nu_{23}^c\right)^2 \frac{E_3^c}{E_2^c} + \left(\nu_{13}^c\right)^2 \frac{E_3^c}{E_1^c} < 0
\end{gathered} \qquad \textbf{(4)}$$

where W is the weight of the sandwich plate, while λ is the first buckling load. λ_{ref} is the buckling load determined on a reference structure having the same in-plane dimensions and boundary conditions than those of the sandwich plate that will be optimised, while α is the maximum admissible aspect-ratio between the thickness of the core and each skin. Constraints 4 and 5 are geometrical and feasibility constraints imposed on the polar parameters of top and bottom skins. Finally, constraints from 6 to 15 are imposed in order to ensure the positive definiteness of the stiffness tensor of the core.

3.3 – Numerical procedure

Problem **(4)** is a non-linear, non-convex problem in terms of both geometrical and mechanical variables. The total number of design variables is 13, see Eq. **(3)**, while the total number of optimisation constraints is 15.

For the resolution of problem **(4)** we used a numerical strategy, that makes use of the GA BIANCA [M1] coupled with a meso-scale FE model for the numerical homogenisation of the honeycomb core and a macro-scale FE model for the buckling analysis of the whole panel, see Fig 3.

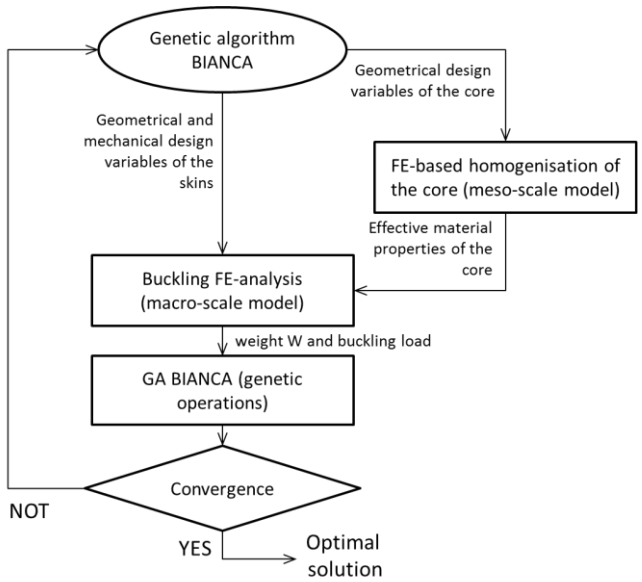

Figure 3. Numerical procedure scheme for the first-level problem.

As shown in Fig. 3, for each individual at each generation, we perform a numerical simulation for the evaluation of the effective material properties of the core and a subsequent numerical simulation for the evaluation of the first buckling load of the sandwich structure along with its weight. The meso-scale FE model uses the geometrical parameters of the unit cell, given by the GA BIANCA, in order to homogenise the honeycomb core and to determine its effective material properties. Afterwards, the macro-scale FE model uses the geometrical and mechanical design variables of the skins given by the GA BIANCA along with the effective material properties of the core to evaluate the first buckling load of the structure and its weight. Therefore, for these purposes the

genetic algorithm BIANCA has been interfaced with the commercial FE code ANSYS®.
The GA BIANCA elaborates the results of the two FE analyses in order to execute the genetic operations. These operations are repeated until the GA BIANCA meets the user-defined convergence criterion.

The generic individual of the GA BIANCA represents a solution. The genotype of the generic individual, for the optimisation problem of the first level of the strategy, is characterised by only one chromosome composed of 13 genes representing, each one, a component of the vector of the design variables, see Eq. **(3)**.

4- Formulation of the second level problem

The second-level problem concerns the lay-up design of top and bottom skins. Such a problem consists in determining a laminate stack satisfying the optimum values of both geometric and polar parameters issued from the first level of the strategy. The problem of finding a laminate stacking sequence having a given elastic behaviour is rather cumbersome and difficult because the laminate properties depend upon a combination of powers of circular functions of the layers orientations, see [MV2].
In the framework of the polar formalism, such a problem can be stated in the form of an unconstrained minimisation problem:

$$\min_{\boldsymbol{\delta}} I\left(f_i(\boldsymbol{\delta})\right) = \sum_{i=1}^{r} f_i^2(\boldsymbol{\delta}) \qquad \textbf{(5)}$$

where $\boldsymbol{\delta}$ is the vector of the layer orientations, i.e. the design variables of this phase, while $f_i^2(\boldsymbol{\delta})$ are quadratic functions in the space of polar parameters, each one representing a requirement to be satisfied, such as orthotropy, uncoupling and so on.
It is worth noting that the function $I\left(f_i(\boldsymbol{\delta})\right)$ of Eq. **(5)** is convex in the space of the laminate polar parameters, though it is highly non-convex in the space of the plies orientations (the true design variables) whose minima are known *a priori*, i.e. they are zeroes of this function. For more details about the nature of the second-level problem, see [C1, MV2].

We used the GA BIANCA to find a solution also for the second-level problem. In this case, each individual has a genotype composed of *n* chromosomes, one for each ply, characterised by a single gene coding the layer orientation.

5- Finite element models

The FE models used at the first-level of the strategy are built using the FE commercial code ANSYS®. The need to analyse, within the same generation, different geometrical configurations (plates with different geometrical and material properties), each one corresponding to an individual, requires the creation of an ad-hoc input file for the FE code that has to be interfaced with BIANCA. The FE model must be conceived to take into account a variable geometry, material and mesh. Indeed, for each individual at the current generation the FE code has to be able to vary in the correct way the number of elements wherein the structure is discretised, thus a correct parameterisation of the model has to be achieved.

5.1 – FE model of the unit cell

In order to determine the effective properties of the core, a homogenisation technique reveals to be necessary. In this way, the periodic honeycomb structure can be replaced by an equivalent orthotropic homogeneous solid whose material properties depend on the geometric parameters of the repetitive unit of the honeycomb. In particular, these properties are determined using the strain energy-based homogenisation technique of periodic media. This technique makes use of the repetitive unit of the periodic structure to approximate its effective properties at the macro-scale level. The basic feature of the strain energy-based homogenisation technique consists in the assumption that the repetitive unit of the periodic structure and the corresponding volume of the homogeneous solid undergo the same deformation having, hence, the same strain energy, see [B1]. In this case, the periodic structure is the honeycomb core whose repetitive unit cell has three planes of symmetry, thus we decided to exploit these symmetries using, in the homogenisation process, only an eighth of the repetitive unit cell. As illustrated in Fig. 4 the model is built using the 20-node ANSYS solid element SOLID186.

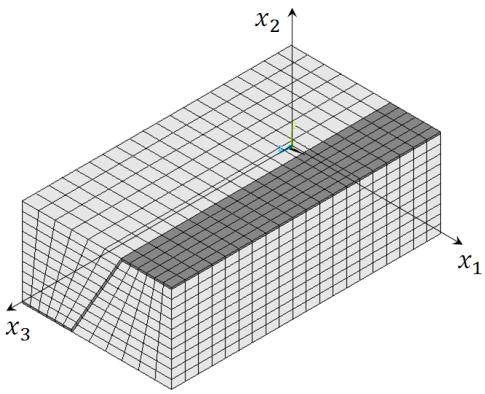

Figure 4. FE model of the repetitive unit cell.

In Fig. 4, the dark-grey elements represent the aluminium foils of the honeycomb core, while the light-grey ones are the fictitious elements used to model the "second phase" which has the properties of the so-called "elastic air", see [A2].

5.2 – FE model of the sandwich panel

At the macro-scale the structure is modelled with a combination of shell and solid elements. In particular, the laminated skins are modelled using ANSYS SHELL281 elements with eight nodes and six degrees of freedom (DOFs) per node, and their mechanical behaviour is described by defining directly the normalised stiffness tensors $\mathbf{A}^*$, $\mathbf{B}^*$ and $\mathbf{D}^*$. The equivalent solid representing the core is modelled using ANSYS SOLID186 elements with 20 nodes and 3 DOFs per node having the material properties

calculated using the FE model of the unit cell. Concerning the Boundary Conditions (BCs) of the FE model at the macro-scale, they are depicted in Fig. 5 and listed in Table 2. In particular, such BCs are applied only on the edges of top and bottom skins. The compatibility between the displacement field of the skins (modelled with shell elements) and that of the core (modelled with solid elements) is obtained by means of constraint equations on each node belonging to contiguous solid and shell elements, see Fig. 5. In particular, we imposed rigid constraints between the nodes of the middle plane of the top (bottom) skin and the corresponding ones of the top (bottom) surface of the solid core. Through such constraints, the displacements of the nodes belonging to the top and bottom surfaces of the solid core are equal to those of the bottom and top faces of the top and bottom skins, respectively.

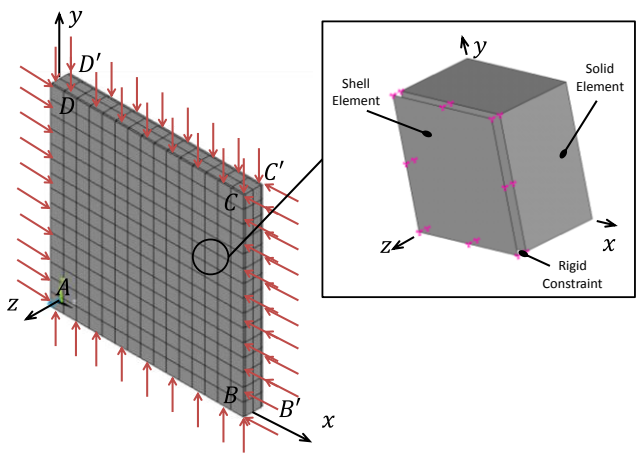

Figure 5. FE model at the macro-scale.

Sides	Constraint
AB, A´B´, CD, C´D´	$U_x = 0$ $U_z = 0$
BC, B´C´, DA, D´A´	$U_y = 0$ $U_z = 0$

Table 2. BCs of the FE model of the sandwich panel.

6- Numerical results

In order to show the effectiveness of the proposed approach we studied several cases. However, for the sake of brevity, here we show only the results concerning one of these cases: a sandwich panel with different skins and with a core having a fixed thickness. In this case the core thickness does not belong to the vector of design variables, see Eq. **(3)**, being equal to that of the reference structure. The reference structure is a square plate of side $a = 1500$ mm characterised by the material properties listed in Table 1 and the geometrical properties listed in Table 3.

Concerning the genetic parameters of the GA BIANCA used to solve the problem for this particular case, we consider one population of 140 individuals evolving along 300 generations with crossover and mutation probabilities of 0.85 and 0.017 respectively. The roulette-wheel operator performs selection, the elitism is active whilst the ADP method is used for handling constraints, see [MV3].

Core				
ϑ [deg]	l_1 [mm]	l_2 [mm]	h_c [mm]	t_c [mm]
60	3.666	1.833	80	0.0635
Skins				
h_t [mm]		h_b [mm]		
4 (32 plies)		4 (32 plies)		
Top skin sequence [deg]				
$[45/0/45/45/-45/45/-45/0/0/45/-45/45/-45/-45/0/45]_s$				
Bottom skin sequence [deg]				
$[45/0/45/45/-45/45/-45/0/0/45/-45/45/-45/-45/0/45]_s$				
Weight [Kg]		**1st buckling load** [N/mm]		
41.02		5691.88		

Table 3. Geometrical properties of the reference structure.

The optimal values of the geometric as well as mechanical design variables issued from the first-level are listed in Table 4. As it can be easily seen, the optimum configuration has a weight of 36.88 Kg (about 10 % less than that of the reference structure) with a first buckling load of 5704.33 N/mm (about 0.2 % greater than the reference one).

Core					
ϑ [deg]	l_1 [mm]	l_2 [mm]	h_c [mm]	t_c [mm]	
47	4.90	0.30	80	0.065	
Skins					
h_t [mm]			h_b [mm]		
3.5 (28 plies)			3.5 (28 plies)		
$\left(R_{0K}^{A*}\right)_t$ [MPa]	$\left(R_1^{A*}\right)_t$ [MPa]	$\left(\Phi_1^{A*}\right)_t$ [deg]	$\left(R_{0K}^{A*}\right)_b$ [MPa]	$\left(R_1^{A*}\right)_b$ [MPa]	$\left(\Phi_1^{A*}\right)_b$ [deg]
19594	356	-45	19324	168	45
Top skin sequence [deg]					
[-44/46/-44/46/41/-44/-44/46/46/46/-49/-44/51/-44/46 -49/41/-44/-39/41/46/-44/46/-44/-44/46/-49/46]					
Bottom skin sequence [deg]					
[43/43/-45/-45/-45/49/49/-41/-53/47/-44/43/-45/ -45/39/43/-46/40/48/-44/48/48/-41/-50/-45/44/44/-45]					
Weight [Kg]			**1st buckling load** [N/mm]		
36.88			5704.33		

Table 4. Geometrical and mechanical properties of the optimum configuration.

The optimal laminate stacks, satisfying the values of the geometric and polar parameters issued from the first-level problem, for both top and bottom skins are also listed in Table 4. It is worth noting that these stacking sequences represent true general solutions: no hypotheses are imposed on the stack in order to meet the elastic requirements, unlike what is often done in the literature (for example symmetric

stacks in order to obtain the elastic uncoupling, balanced stacks to obtain the membrane orthotropy, and so on).

7- Conclusions

The main aim of the present work is to deal with the problem of the optimum design of a sandwich panel composed of two laminated skins and a honeycomb core. The design strategy that we propose is a numerical optimisation procedure that does not make use of any simplifying assumption. The design process that we propose is not submitted to restrictions: any parameter characterising our structure is an optimisation variable (geometry of the unit cell of the honeycomb core, as well as the orientations and the number of plies for the skins). In order to face the design of the sandwich structure in a very general way a two-level multi-scale strategy has been considered. The first level of the procedure involves two scales:

- the macro-scale wherein the sandwich panel is composed by two homogeneous anisotropic plates (the skins) whose behaviour is described in terms of the laminate polar parameters along with an homogeneous anisotropic core whose mechanical response is defined in terms of its effective elastic properties;

- the meso-scale of the honeycomb core where we need to model the related representative volume element in order to determine the effective material properties of the core used at the macro-scale.

Many types of design variables are included at this first level: the geometrical parameters of the honeycomb unit cell (meso-scale) together with the total thickness and the laminate polar parameters of each skin (macro-scale). The second level of the procedure concerns the meso-scale of the laminated skins: in this phase, we look for the optimal stacking sequences giving the optimum value of the thickness and of the laminate polar parameters issued from the first step.

Several features that make it an innovative, effective and general method for the design of complex multi-scale structures characterise the optimisation strategy presented in this work. The example presented in this paper shows that when standard rules for the laminate stacks are abandoned and when all the parameters characterising the structure, at each scale, are included among the design process a significant weight saving can be obtained: up to 10 % when compared to that of the reference structure with almost the same buckling load (0.2 % greater).

As a concluding remark, it can be noticed that the proposed strategy is really effective and robust and can be easily applied to other different problems.

7- References

[A1] H. G. Allen, Analysis and design of structural sandwich panels, Pergamon Press, 1969.

[A2] ANSYS, Inc., 275 Technology Drive, Canonsburg, PA 15317, ANSYS Mechanical APDL Modeling and Meshing Guide, 2012.

[B1] E. J. Barbero, Finite element analysis of composite materials, Taylor and Francis Group, 2008.

[C1] A. Catapano, Stiffness and strength optimisation of the anisotropy distribution for laminated structures, PhD thesis, Université U.P.M.C. Paris VI, 2013. http://tel.archives-ouvertes.fr/tel-00952372

[GA1] L. J. Gibson, M. F. Ashby, Cellular solids - Structure and properties, Cambridge, University Press, 1997.

[HA1] Huang, S. N. and Alspaught, D. W., Minimum weight sandwich beam design, AIAA Journal, 12: 1617-1618, 1974.

[M1] M. Montemurro. Optimal Design of Advanced Engineering Modular Systems through a New Genetic Approach. PhD thesis, Université U.P.M.C. Paris VI, 2012. http://tel.archives-ouvertes.fr/tel-00955533/

[MV1] M. Montemurro, A. Vincenti, P. Vannucci, A two-level procedure for the global optimum design of composite modular structures - application to the design of an aircraft wing. Part 1: theoretical formulation, Journal of Optimization Theory and Applications, 155(1): 1-23, 2012.

[MV2] M. Montemurro, A. Vincenti, P. Vannucci, A two-level procedure for the global optimum design of composite modular structures - application to the design of an aircraft wing. Part 2: numerical aspects and examples, Journal of Optimization Theory and Applications 155 (1): 24-53, 2012.

[MV3] M. Montemurro, A. Vincenti, P. Vannucci, The Automatic Dynamic Penalisation method (ADP) for handling constraints with genetic algorithms, Computer Methods in Applied Mechanics and Engineering 256: 70–87, 2013.

[V1] P. Vannucci, Plane anisotropy by the polar method, Meccanica 40: 437-454, 2005.

[V2] P. Vannucci, A note on the elastic and geometric bounds for composite laminates. Journal of Elasticity 112(2): 199–215, 2013.

[V3] A. Vautrin, Mechanics of sandwich structures, Springer, 2010.

[V4] G. Verchery, Les invariants des tenseurs d'ordre 4 du type de l'élasticité, Proc. Of Colloque Euromech 115, VIllard-de-Lans, (France), 1979.

[V5] J. R. Vinson, The behavior of sandwich srtuctures of isotropic and composite materials, Technomic Publishing Company, 1999.